Instruction

MI 611-222
August 2009

Model 875CR
Intelligent Electrochemical Analyzer
for
Contacting Conductivity and Resistivity Measurements

FOXBORO™

Contents

Figures ..... **vii**

Tables ..... **ix**

1. Introduction **1**
Reference Documents 1
Factory Default Passcode 1

2. Quick Start **3**
Wiring 3
Checking Factory Configuration 4
Basic Operation in Measure Mode 4
Looking for More Information? 5

3. Specifications **7**
Operating, Storage, and Transportation Conditions 7
Functional and Physical Specifications 7

4. Installation **11**
Unpacking 11
Identification 11
Mounting 12
- Panel Mounting 12
- Surface Mounting 13
- Pipe Mounting 13

Wiring 14
- Panel-Mounted Analyzer 14
- Pipe- or Surface-Mounted Analyzer 14
- Wiring Connections 15
- Digital Input Wiring 17
- HART I/O Communication Wiring 18
- Analog Output Wiring 19
- Alarm Wiring 19
  - Energized Trip State 19
  - De-energized Trip State 19

5. Operation Via Local Display **21**
Controls and Indicators 21
Display 22

Dual Measurement Screen 22
Single Measurement Screen 23
Fault Messages 23
Sensor Fault 23
Configuration Fault 23
Analyzer Fault 24
Digital Fault 24
Slope Error 24
Scale Error 24
Ref Error 24
Passcode Access 24
Viewing and Changing Data 26
Accessing Operating Modes 27
Measure Mode 28
Status Mode 30
Hold Mode 33
Calibration Mode 35
Solution Calibration (Conductivity Only) 37
Bench Calibration (Conductivity and Resistivity) 39
Pure H2O 41
Analog 1 and Analog 2 41
Configuration Mode 41
Configuration Display 43
Cell Mode 44
Cell, Cell 1, and Cell 2 44
Cell Const 44
Temp Type 44
Temp Units 45
Temp Mode 45
Number of Apps 45
Application, Application n 45
Measurement, Measurement n 45
Measure Unit = MΩ•cm, kΩ•cm, µS/cm, mS/cm, mS/m, or S/m 46
Meas Units = % 47
Meas Units = Custom 48
Damping 49
Temp Comp, Temp Comp n 50
Meas Unit Configured kΩ•cm, µS/cm, mS/cm mS/m, or S/m 50
Measure Unit Configured MΩ•cm 54
Display 54
Analog 1 and Analog 2 56
Measurement/Calculation 56
Output Range 56
Failsafe Output 57
HART Analog 57
HART Digital Outputs 58
HART PV (Analog 1) 58
HART SV (HART Analog) 58

HART TV 58
HART FV 58
Alarm 1, Alarm 2 59
Measurement/Calculation/Condition 59
Alarm Activation 59
Run App 61
Remote 61
HART Digital 62
Cal Parameters 62
Measurement and Temperature Stability 62
Calibration Deviation 63
Local ac Power 63
Automatic Hold 63
Diags 63
Leakage 63
ATC Short, ATC Open 64
4 - 20 Range 64
Comp Range 64
Meas Range 64
Timeouts 64
Date and Time 64
Analyzer Names 64
Passcodes 65
Adjust LCD 65
Factory Defaults 65
Diagnostic Mode 66
Calibration Validation 67
Remote Data Logging 68

6. Operation Via HART Communicator 71
Description 71
Overview of Top Level Menus 71
Connecting the Communicator to the Analyzer 72
Communicator Keyboard and Display 72
Offline Configuration 72
Online Configuration 73
Online Flowchart 73
Online Modes 74
Measurement 74
Status 74
Hold 74
Calibrate 74
Configure 75
Diagnostics 75
Logon Passcode 75
Explanation of Parameters 76

7. Maintenance **79**

Appendix A. Structure Diagrams **81**

Appendix B. Configuration Table **93**

Index **103**

Figures

1 Wiring Connections from 871CR Sensor 3
2 Wiring Connections from 871CC Sensor 4
3 Sample Information Data Label 11
4 Sample Configuration Data Label 12
5 Panel Mounting 12
6 Surface Mounting 13
7 Pipe Mounting (Vertical Pipe Mounting Shown) 13
8 Wiring Connections from 871CR Sensor 16
9 Wiring Connections from 871CC Sensor 16
10 Optically Isolated Interface 24 V dc, FET Output PLC 18
11 Optical Isolated Analog Switch 18
12 Electromechanical Relay Interface 18
13 Alarm Wiring in Energized Trip State 19
14 Alarm Wiring in De-energized Trip State 19
15 Indicators and Controls 21
16 Sample Dual Measurement Screen 22
17 Sample Single Measurement Screen 23
18 Example of Structure Diagram 26
19 Mode Key Operation 27
20 Measure Mode Structure Diagram 29
21 Sample Status Screen 30
22 Status Mode Structure Diagram 32
23 Sample Hold Screen 33
24 Hold Mode Structure Diagram 35
25 Sample Calibration Screen 36
26 Calibration Category Structure Diagram 37
27 Solution Calibration Structure Diagram 38
28 Bench Calibration Structure Diagram 39
29 Resistor Connection 40
30 Pure Water Calibration Structure Diagram 41
31 Analog Calibration Structure Diagram 41
32 Configuration Mode Exit Flow 43
33 Sample Configuration Screen 43
34 Reference Conductivity vs. Concentration Data 48
35 Configured Conductivity vs. Concentration Data 49
36 Reference Conductivity vs. Temperature Data 53
37 Configured Conductivity vs. Temperature Data 53
38 High Alarm with Hysteresis 59
39 Timed Low Alarm 60
40 Sample Diagnostic Screen 66
41 Top Level Diagnostic Mode Structure 67
42 HART Communicator Main Menu 71
43 875 Series Analyzers Top Level Online Menu 72

44 HART Communicator Connection 72
45 Online Configuration Flowchart 73
A-1 Configuration Top Level Structure Diagram 81
A-2 Configure Cell Mode Structure Diagram 82
A-3 Configure Cell Structure Diagram 82
A-4 Configure Applications Structure Diagram 82
A-5 Configure Measurement Structure Diagram 83
A-6 Configure Tempcomp Structure Diagram 84
A-7 Configure Display Structure Diagram 85
A-8 Configure Analog Structure Diagram 86
A-9 Configure HART Analog, HART TV, or HART FV Structure Diagram 87
A-10 Configure Alarm Structure Diagram 88
A-11 Configure Run Application Structure Diagram 89
A-12 Configure Remote Structure Diagram 89
A-13 Configure HART Digital Structure Diagram 89
A-14 Configure Calibration Parameters Structure Diagram 90
A-15 Configure Automatic Hold Structure Diagram 90
A-16 Configure Diagnostic Structure Diagram 90
A-17 Configure Timeouts Structure Diagram 91
A-18 Configure Date and Time Structure Diagram 91
A-19 Configure Analyzer Names Structure Diagram 91
A-20 Configure Passcode Structure Diagram 91
A-21 Configure LCD Adjustment Structure Diagram 91
A-22 Configure Factory Defaults Structure Diagram 91

Tables

1 Operating, Storage, and Transportation Conditions 7
2 Product Safety Specifications 9
3 Recommended Conduit and Fittings 15
4 Terminal Identification 17
5 Indicators and Controls 21
6 Passcode Access 24
7 Status Parameters 30
8 Calibration Resistors 40
9 Scale for Units Other than % or Custom 46
10 Actual Upper Range Settings as a Function of Temperature 47
11 Primary Scale in Percent by Weight 47
12 Temperature Compensations 50
13 Display Configuration 55
14 Bar Graph Configuration 55

1. Introduction

The 875CR Contacting Conductivity/Resistivity Analyzer is one of a family of line-powered analyzers. It receives conductivity or resistivity measurements from a measuring sensor and provides that information via a front panel display, integral dual analog (4 to 20 mA) outputs, an optional digital communication port, and dual alarm outputs.

The analyzer is available in panel, pipe, and surface mounted versions. The panel mounted version is rated NEMA Type 1. However, the front panel meets NEMA Type 4X requirements when mounted in a panel and gasketed in place with an Invensys Process Systems (IPS) supplied gasket. The pipe and surface mounted versions are dusttight and weatherproof, as defined by IEC IP65, and provide the environmental and corrosion resistant protection of NEMA Type 4X. The 875CR Analyzers are also designed to meet the electrical safety requirements of major testing laboratories.

The integral display consists of 240 x 128 pixel backlighted Liquid Crystal Display (LCD). Various combinations of pixels create the text and symbols for the entire front panel operating modes.

WARNING

If your analyzer is used in a manner not specified by IPS, the fire and electrical shock protection provided by the analyzer may be impaired.

Reference Documents

The following documents provide additional and related information.

Document[(a)]	Description
DP 611-164	Dimensional Print - 875 Electrochemical Analyzers
MI 611-206	FM, CSA, and IEC Intrinsically Safe Connector Diagrams and Nonincendive Circuits
MI 611-208[(b)]	Electrochemical Products Safety Information (for European installations)
MI 611-226	Instruction - 875 Remote Communication Program
PL 611-163	Parts List - 875CR Electrochemical Analyzers, Style C

(a) Documents are available on line at **www.ips.invensys.com** (pull down **Products** menu and select **Measurement & Instruments,** then **Analytical**, then **Contacting Conductivity and Resistivity,** then **Documentation**, then **Specs, Instructions, Drawings, Parts**).

(b) Available in many languages on line at **www.ips.invensys.com** (pull down **Products** menu and select **Measurement & Instruments,** then **Downloads**, then **Safety Instructions for Analytical**).

Factory Default Passcode

The factory default passcode for all three levels of passcode is **0800**.

2. Quick Start

The purpose of this section is to:

- Help you to wire your analyzer
- Familiarize you with the instrument configuration as received from the factory
- Explain normal operation in Measure mode.

Wiring

Connections to your 875CR panel mounted instrument are located on the rear of the housing; those of your pipe or surface mounted instrument are located in the lower compartment. Access to the connection terminals are via openings in the bottom of the enclosure. Make your sensor connections to the top terminal strip and ac power, analog output, alarm output, and digital I/O connections to the lower terminal strip per Figure 1.

WARNING

Wiring installation must comply with any existing local regulations.

CAUTION

Your analyzer was made to accept a certain supply voltage. Check the data plate on the transmitter cover for correct supply voltage before wiring.

NOTE

Refer to MI 611-206 for FM, CSA, and IEC wiring requirements.
Refer to MI 611-208 for European (ATEX) safety information

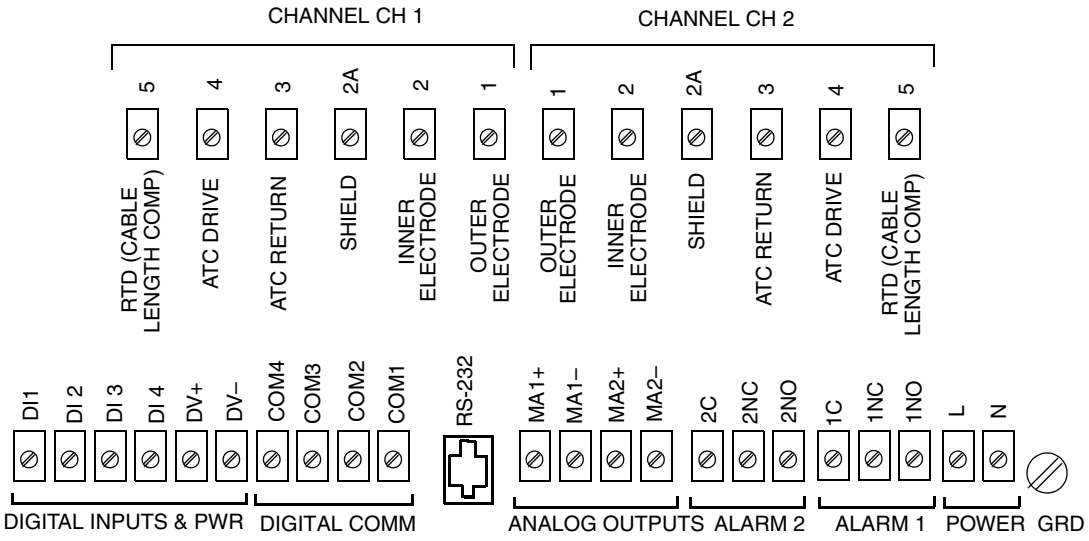

Figure 1. Wiring Connections from 871CR Sensor

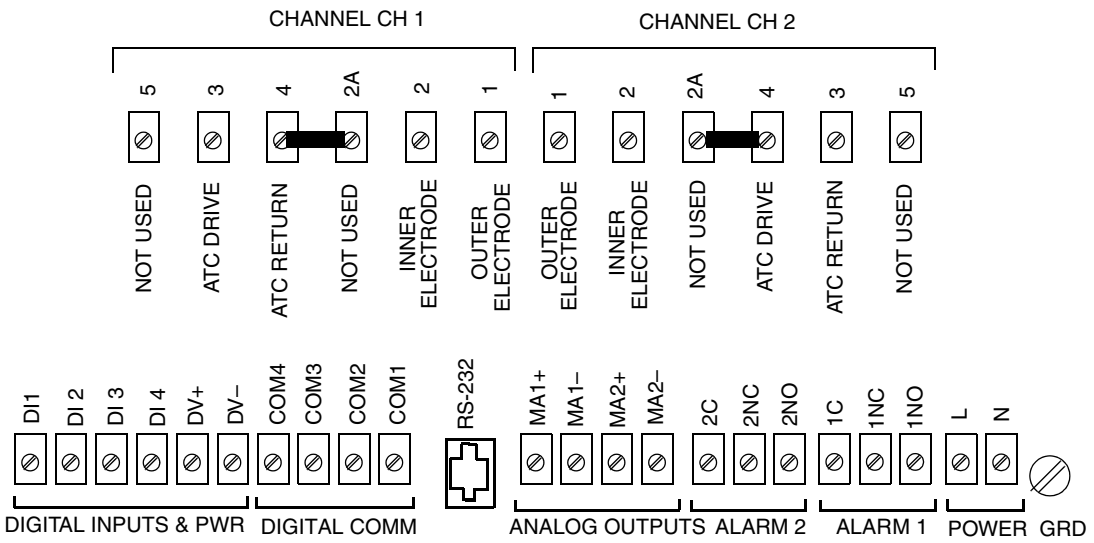

NOTE: Jumpers are included in Kit BS811AP. Leakage diagnostics must be disabled.

Figure 2. Wiring Connections from 871CC Sensor

NOTE

1. CH 1 must be used for single cell operation.
2. CH 1 must be used in high conductivity (low resistivity) applications if using difference in dual cell mode.
3. The ground connection on Style C panel mounted analyzers is located as shown above. The ground connection on Style C field mounted analyzers is on a case boss just below the power connections.
4. The ground connection for Style A and B analyzers is shown in Figures 8 and 9.

Checking Factory Configuration

Following the structure diagrams in Appendix A on page 81 and using the arrow keys, you can step through the product structure as configured in the factory.

NOTE

The factory default passcode for all three levels of passcode is **0800**.

Basic Operation in Measure Mode

Measure is the normal operating mode of your analyzer. It is indicated by an illuminated **Measure** indicator. When the display is configured for single line measurements or scanning measurements, the measurement title, value, and unit are displayed. For single line measurements, a bar graph showing the percentage of a configured range is also displayed. When configured for dual line measurements, the Line 1 cell indicator, measurement value, and unit and Line 2 cell indicator, measurement, and unit are displayed. A bar graph showing the percentage of the Line 1 configured range is also displayed. Any measurement can be temporarily scrolled onto the display

by using the **Up** and **Down** arrow keys. These user-selected measurements show the measurement title, units, and value. During the display of these user-selected measurements, the bar graph is inactive. You can return to the configured selection by using the **Up** and **Down** arrow keys. The display automatically returns to the configured selection when the configured Timeout time is reached. Fault messages are also shown on your display while in the Measure mode. Alarm status is shown by two alarm indicator lamps.

Looking for More Information?

For more detailed information, refer to the following sections of this manual:

- For installation information, refer to “Installation” on page 11.
- For detailed explanation of the controls and indicators, refer to “Controls and Indicators” on page 21.
- For detailed configuration instructions, refer to “Configuration Mode” on page 41.
- For detailed calibration instructions, refer to “Calibration Mode” on page 35.

For dimensional information, refer to DP 611-164.

If you need additional help, contact the IPS Global Client Support Center at 1-866-746-6477 or contact your local IPS representative.

3. Specifications

Operating, Storage, and Transportation Conditions

Table 1. Operating, Storage, and Transportation Conditions

Influence	Reference Operating Conditions	Normal Operating Condition Limits	Operative Limits	Storage and Transportation Limits
Ambient Temperature	23±2°C (73±4°F)	-10 and +65°C (14 and 149°F)	-20 and +75°C (-4 and +165°F) [a]	-40 and +85°C (-40 and +185°F)
Relative Humidity	50±10%	5 and 95% Noncondensing	5 and 95% Noncondensing	5 and 95% Noncondensing
Supply Voltage	Rated Voltage [b] ±1%	Rated Voltage [b] -15 and +10%	Rated Voltage [b] -20 and +15%	Not Applicable
Supply Frequency	50 or 60 Hz, ±1%	50 or 60 Hz, ±3%	50 or 60 Hz, ±3%	Not Applicable
Vibration Field Mount Panel Mount	1 “g” (10 m/s2) between a frequency or 5 and 200 Hz 0.25 “g” (2.5 m/s2) between a frequency or 5 and 200 Hz			Note (c)
Mounting Position	Generally Upright	Any Position	Any Position	Not Applicable

(a) -20 and +60°C (-4 and +140°F) for analyzers with ATEX and IEC certification

(b) Rated voltage is 24, 100, 120, 220, or 240 V ac or 24 V dc.

(c) During transportation, the packaged analyzer can withstand normal shipping and handling conditions without damage.

Functional and Physical Specifications

Supported Sensors:

The 875CR Analyzer is used with Invensys Foxboro 871CR and 871CC Series Conductivity/Resistivity Sensors. Contact IPS for limitations and procedures with other electrically compatible sensors.

Minimum Output Span: 5% of full scale

Maximum Output Span: 500% of full scale

Minimum Resistivity Measurement: 1% full scale

Isolated Output Load: 800 ohms maximum

Temperature Compensation Inputs:

100 ohm platinum RTD (2 or 3 wire)
1000 ohm platinum RTD (2 or 3 wire)
100 kilohm thermistor

Power Consumption: 17 Watts maximum

Alarm Contacts: Form C rated 5 A at 250 V ac, 2 A at 30 V dc, noninductive. The ATEX and IEC limits are 5 A at 160 V ac and 2 A at 30 V dc.

Digital Inputs/Outputs

Terminal DV+ Power: 4.5 V ±3% at 10 mA maximum (provided by the analyzer)

Terminal DV- Power: -20 V +1% at 10 mA maximum (provided by the analyzer)

Inputs DI1 - DI4 (only used with the +4.5 V/-20 V outputs provided by the analyzer):

High Logic: User must ensure voltage to be between 2.7 and 10 V

Low Logic: User must ensure circuit to be open or less than 0.8 V

Data Storage:

Configuration, calibration, and operating parameters are stored in nonvolatile memory for >5 years.

Remote Configuration:

Via RS-232 communication. The interface contains three signal lines (RXD, TXD, GND). The cable, connecting the computer to the analyzer, that is part of the optional configurator utility kit is 3 m (10 ft). This distance can be extended to 15 m (50 ft) with an extension cable. It can be further extended with the use of a user-supplied modem.

Optional Digital Communication Interfaces: HART

Maximum Distance Between Sensor and Analyzer: 33 m (100 ft)

Mounting: Panel, Pipe, or Surface mounting per model code

Enclosure:

Panel Mounting: The basic housing meets NEMA 1 requirements for general purpose, indoor applications. However, when installed in a panel and gasketed in place, the front surface provides the environmental and corrosion resistant protection of NEMA Type 4X, CSA Enclosure 4X, and IEC IP65.

Field (pipe or surface) Mounting: The enclosure provides the environmental and corrosion resistant protection of NEMA Type 4X, CSA Enclosure 4X, and IEC IP65.

Weight (approximate):

Panel Mounted: 1.8 kg (4 lb)
Pipe or Surface Mounted: 3.3 kg (7.3 lb)

European Union and International Directives:

Complies with the Electromagnetic Compatibility Requirements of European EMC Directive 89/336/EEC by conforming to the CENELEC and IEC Standards as follows:

- Field Mount: EN50081-2 and EN50082-2. Also complies with NAMUR Part 1 Interference Immunity Requirement (Germany version of EN50081-2 and EN50082-2)
- Panel Mount: EN61326, ANNEX A.

Both Field-Mounted and Panel-Mounted analyzers comply and conform to applicable European Union Directives ("CE" marking on product).

Pollution Degree: Degree 2 per ANSI/ISA S82.01

Installation Category: Category III per ANSI/ISA S82.01

Product Safety:

The 875 Analyzer has been designed to meet electrical safety descriptions listed in Table 2. For detailed information, or status of testing laboratory approvals/certifications, contact IPS.

Table 2. Product Safety Specifications

Testing Laboratory, Types of Protection, and Area Classification	Application Conditions	Electrical Safety Design Code
CSA Ordinary locations.	For panel mounted units, see note (a).	C
CSA for Class I, Division 2, Groups A, B, C, and D; Class II, Division 2, Groups F and G; and Class III, Division 2 hazardous locations	Temperature Class T4. For CSA loop certified non-incendive circuits, see MI 611-206. For panel mounted units, see note (a).	
FM Ordinary locations.	For panel mounted units, see note (a).	F
FM nonincendive for Class I, Division 2, Groups A, B, C, and D; Class II, Division 2, Groups F and G; and Class III, Division 2 hazardous locations	Temperature Class T4. For panel mounted units, see note (a).	
ATEX Ex protection 'n' for Zone 2; II 3 G EEx nC[L] IIC. (b)	Temperature Class T4 at maximum ambient temperature of 60°C (140°F). See certificate KEMA 02ATEX1329 X	N
IECEx protection 'n' for Zone 2; Ex nA nL nC [nL] IIC	Temperature Class T4 at maximum ambient temperature of 60°C (140°F).	D
UL Ordinary locations	- - -	U

(a) Panel-mounted unit must be installed as follows:
For Ordinary and Class I, Division 2 locations: install in a protective enclosure to prevent access to live parts.
For Class II and Class III Division 2 locations: install in a dusttight enclosure.

(b) The L means that the unit contains energy limited circuits to the sensor.

4. Installation

Unpacking

1. Remove the analyzer from the shipping container and check for visible damage.
2. Save the container until you determine that no shipping damage has occurred.
3. If the analyzer has been damaged, notify the carrier immediately and request an inspection report. Obtain a signed copy of the report from the carrier and call the IPS Global Client Support Center at 1-866-746-6477 or contact your local IPS representative.

Identification

A data label, fastened to the top surface of the enclosure on panel-mounted devices and to the right side on surface- or pipe-mounted devices, provides the model number and other information. A second data label, fastened to the right side surface, provides configuration information pertinent to your particular analyzer. In addition, an agency label, showing electrical certification information, is located on the top surface of the enclosure on panel-mounted devices and to the left side on surface- or pipe-mounted devices.

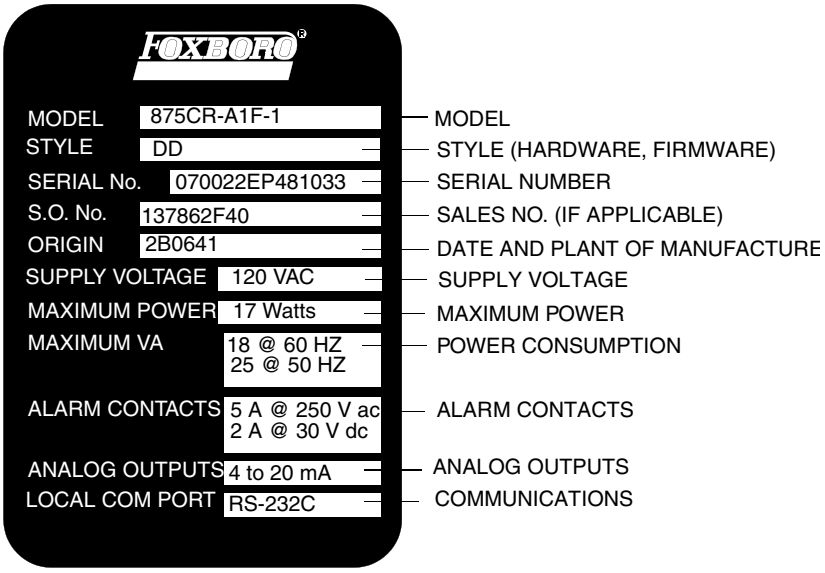

Figure 3. Sample Information Data Label

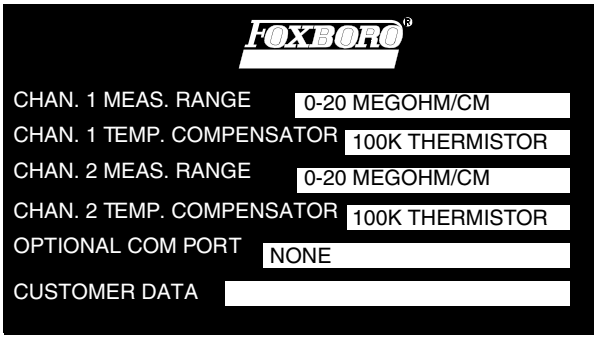

Figure 4. Sample Configuration Data Label

Mounting

Panel Mounting

Panel mounting of the analyzer is shown in Figure 5. For panel cutout size, space requirements, and other dimensional data, see DP 611-164. Place the analyzer into the panel cutout from the front side and fasten it to the panel with appropriate hardware via the four holes in the corners of the analyzer bezel. The basic enclosure of the panel-mounted analyzer meets NEMA 1 requirements for general purpose, indoor applications. However, when mounted in a panel and gasketed in place with the IPS supplied gasket, the front surface provides the environmental and corrosion resistant protection of NEMA Type 4X, CSA encl. 4X, and IEC IP65.

WARNING

1. All wiring connections are located on the rear of the analyzer enclosure. Therefore, to meet electrical safety specifications, the analyzer must be installed in a protective enclosure to prevent accessibility to live parts. For Class II and Class III, Division 2 locations, the analyzer must be installed in a dusttight protective enclosure.
2. Further, to meet CE requirements, a grounded metal enclosure is required. To assure a good ground, the edges of the panel opening that receives the analyzer must **not** be painted.

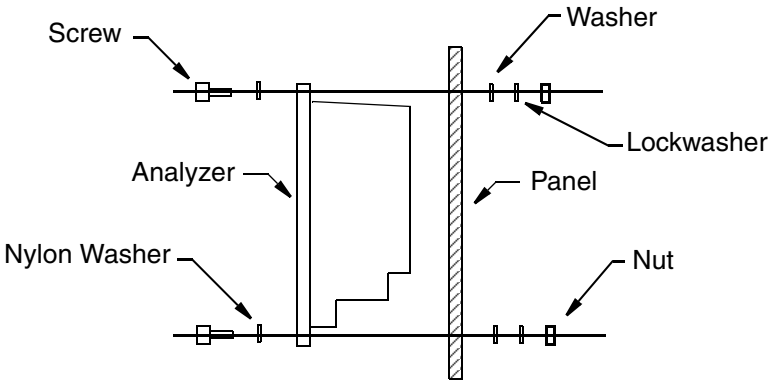

Figure 5. Panel Mounting

Surface Mounting

Surface mounting of the field-mounted analyzer is shown in Figure 6. Fasten the mounting bracket to the analyzer using the screws, washers, and lockwashers provided. Then, fasten the mounting bracket to your surface using appropriate hardware. For space requirements and other dimensional data, see DP 611-164. The field-mounted enclosure provides the environmental and corrosion-resistant protection of NEMA Type 4X, CSA encl. 4X, and IEC IP65.

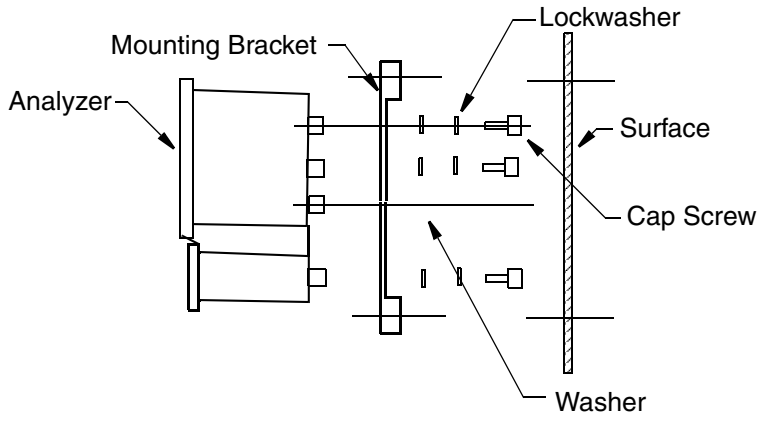

Figure 6. Surface Mounting

Pipe Mounting

Pipe mounting of the field-mounted analyzer is shown in Figure 7. Fasten the mounting bracket to the analyzer using the screws, washers, and lockwashers provided. Then, fasten the mounting bracket to a DN50 or 2-inch pipe using the hardware provided. For space requirements and other dimensional data, see DP 611-164. The field-mounted enclosure provides the environmental and corrosion-resistant protection of NEMA Type 4X, CSA encl. 4X, and IEC IP65.

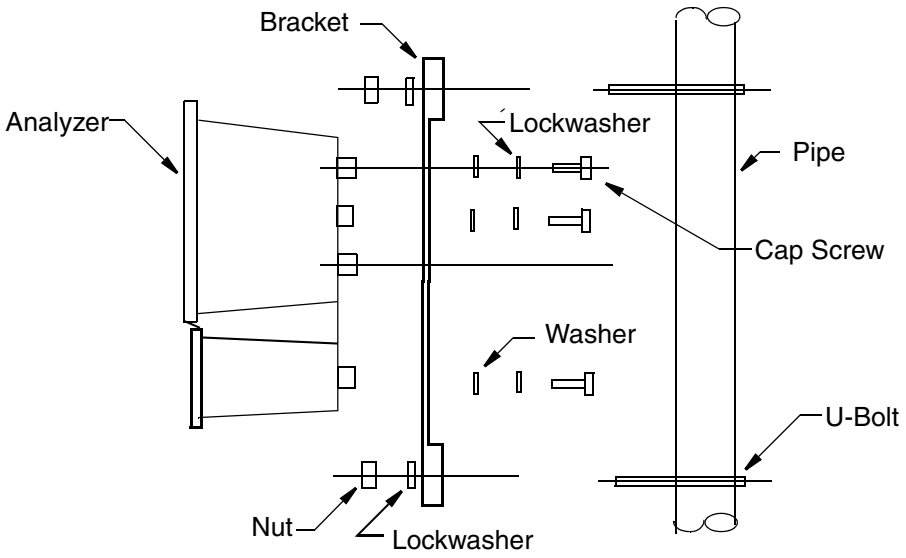

Figure 7. Pipe Mounting (Vertical Pipe Mounting Shown)

Wiring

WARNING

Wiring must comply with any existing local regulations. To meet CE requirements, this must include a switch or circuit breaker, marked as a disconnecting device, and located in close proximity to the analyzer and within easy reach of the operator.

CAUTION

1. Your analyzer uses printed wiring assemblies with MOS devices that are highly susceptible to damage from electrostatic discharge. Relatively low static potential can rupture MOS devices resulting in shorted gate or degraded device characteristics. IPS recommends that all assemblies with MOS devices be handled with the user grounded by wearing a conductive wrist strap or by standing on an ESD mat.
2. Your analyzer was made to accept a certain supply voltage. Check the data plate on the transmitter cover for correct supply voltage before wiring.

NOTE

1. To meet CE requirements:
   a. The ac cable must be routed away from all other I/O wiring, especially the sensor cable.
   b. All wiring must be enclosed in grounded metal conduit.
2. Refer to MI 611-206 for FM, CSA, and IEC wiring requirements.
   Refer to MI 611-208 for European (ATEX) safety information

The distance between your analyzer and sensor should be no more than 33 m (100 ft).

Panel-Mounted Analyzer

If you have a panel-mounted analyzer, make your wiring connections directly to the terminals on the rear of the housing. Terminal identification is shown in Figures 8 and 9 and described in Table 4.

Pipe- or Surface-Mounted Analyzer

If you have a pipe- or surface-mounted analyzer, the wiring connections are located in the lower compartment of the housing. They are accessible via three openings on the bottom of this compartment. There are also two knockouts for additional field wiring entrance. To remove the knockouts:

1. Perform this procedure with the lower compartment cover in place to give the enclosure extra support.
2. Place a screwdriver blade in the ridge of the knockout.
3. Rap the screwdriver sharply with a hammer until the knockout begins to give way.
4. Repeat Steps 2 and 3 around the circumference of the knockout until the knockout falls out.

To wire your pipe- or surface-mounted analyzer:

1. Remove the lower housing compartment cover by removing the four screws securing it in place.
2. Remove the plastic shipping caps from the three openings on the bottom of the housing and replace with proper fittings.

⚠ CAUTION

1. To maintain a rating of NEMA 4X, CSA encl. 4X, or IEC IP65, open ports must be sealed and instrument covers secured. Also, wiring methods, conduit, and fittings appropriate to the ratings must be used. Table 3 identifies recommended parts.
2. To minimize RFI/EMI effect, use grounded metal conduit on sensor cable and input power leads.

Table 3. Recommended Conduit and Fittings

Material	Conduit	Fitting
Rigid Metal	1/2 inch Electrical Trade Size	T&B* #370
Semi-Rigid Plastic	T&B #LTC 050	T&B #LT 50P or T&B #5362
Semi-Rigid Plastic Metal Core	Anaconda Type HV, 1/2 inch	T&B #LT 50P or T&B #5362
Flexible Plastic	T&B #EFC 050	T&B #LT 50P or T&B #5362

*T&B = Thomas & Betts Corp., 1001 Frontier Road, Bridgewater, NJ 08807

3. Bring the wires from your input (ac) power in the right opening and connect to terminals at the right end of the bottom terminal strip as shown in Figures 8 and 9 and described in Table 4.

NOTE

To meet CE requirements, the ac cable must be routed away from all other I/O wiring, especially from the sensor cable.

4. Bring all other wiring (except cell cables) in the middle opening and connect to appropriate terminals on the bottom terminal strip as shown in Figures 8 and 9 and described in Table 4.
5. Bring the cell cables in the left opening and connect to the appropriate terminals on the top terminal strip as shown in Figures 8 and 9 and described in Table 4. If you are using manual temperature compensation and are **not** wiring a temperature measuring device, short terminals 3, 4, and 5 to minimize noise.
6. Connect the remote communications using the RS232 modular phone plug.

Wiring Connections

NOTE

Connect all cables with user supplied strain relief to prevent excess strain on the terminals.

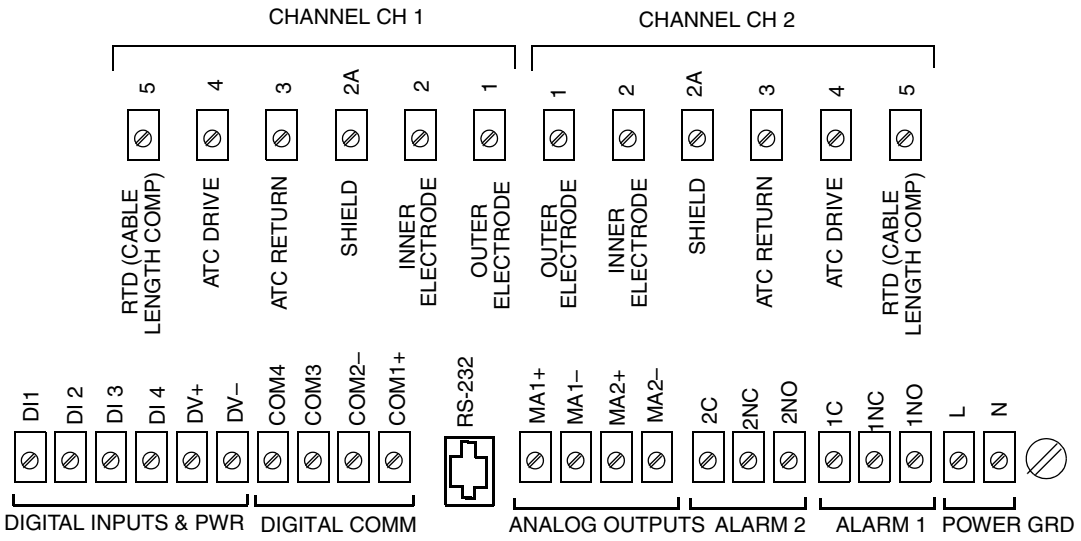

Figure 8. Wiring Connections from 871CR Sensor

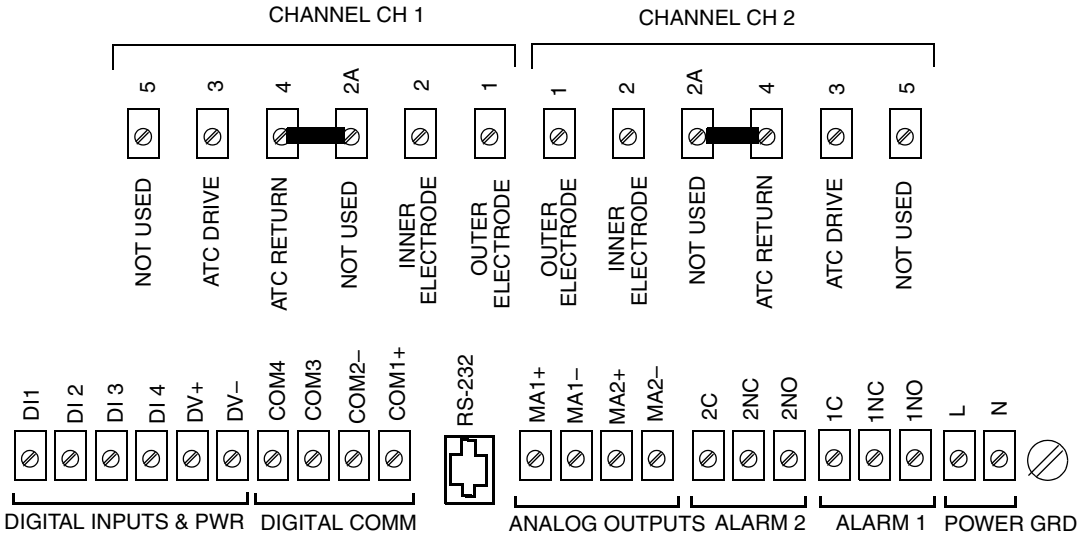

NOTE: JUMPERS ARE INCLUDED IN KIT BS811AP. LEAKAGE DIAGNOSTICS MUST BE DISABLED.

Figure 9. Wiring Connections from 871CC Sensor

— NOTE —

The ground connection on panel mounted analyzers is located as shown in Figures 8 and 9. The connection on field mounted analyzers is on a case boss just below the power connections.

Table 4. Terminal Identification

Terminal Designation	Description
Sensor Connections	
1	Drive (Outer Electrode)
2	Return (Inner Electrode)
2A	Shield (Ground)
3	ATC Return
4	ATC Drive
5	ATC Cable Length Compensator
Digital, Analog, Alarm, and Power Connections	
DI1, 2, 3	Digital Inputs for switching multiple applications
DI4	Not used
COM1, 2 COM3, 4	HART I/O Communication Not used
RS-232	Remote Communication (see MI 611-226)
MA1+, MA1– MA2+, MA2–	Analog Output 1 Analog Output 2[(a)]
1C, 1NC, 1NO 2C, 2NC, 2NO	Alarm 1 Alarm 2
L N G	Power, Line (Black) Power, Neutral (White) Power, Ground (Green)
(a) Not used when HART I/O communication is employed	

Digital Input Wiring

The 875CR Analyzer has three digital inputs. Digital input DI1, DI2, and DI3 are used to activate applications 1, 2, and 3 respectively. Digital input DI4 is not used. For configuration information on changing applications, see “Run App” on page 61.

The voltage to set a digital input high is supplied by the analyzer from terminal DV+. The digital input is activated by closure of a switch that is supplied by the user. If the switch is closed, the digital input voltage is high and if the switch is open, the digital input voltage is low.

CAUTION

Digital inputs are **only** to be used with the voltage provided by the analyzer.

The following figures show the most likely wiring connections to the 875 digital input interface.

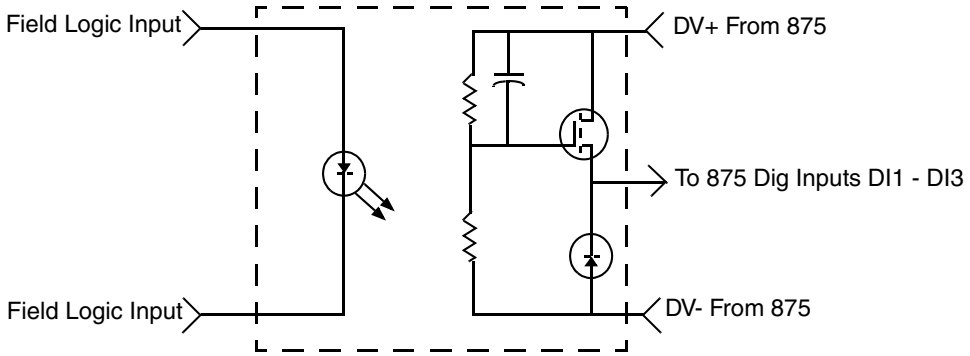

Figure 10. Optically Isolated Interface 24 V dc, FET Output PLC

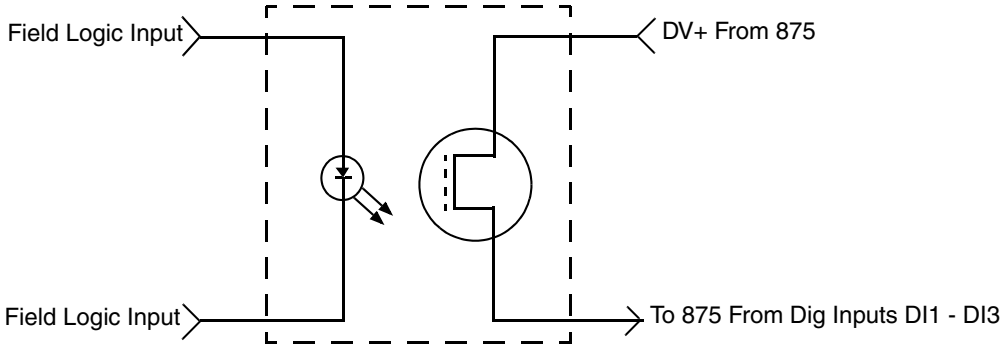

Figure 11. Optical Isolated Analog Switch

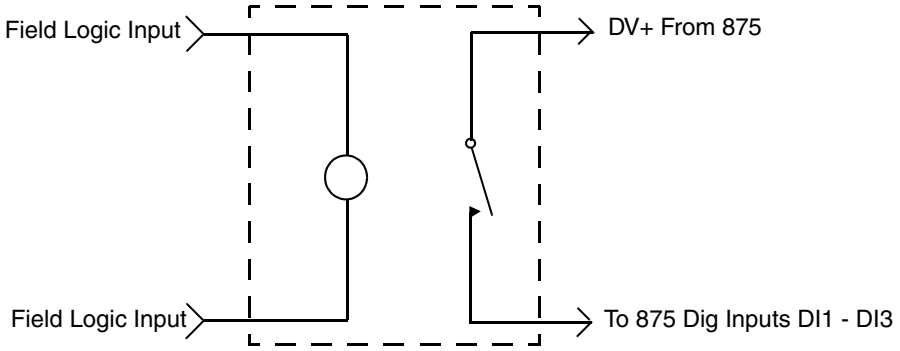

Figure 12. Electromechanical Relay Interface

HART I/O Communication Wiring

If HART Communication (Option-C) is installed, connect your HART loop to the COM1(+) and COM2(-) terminals of the analyzer. See Figures 8 and 9. There must be a minimum 250 ohm load in the loop. Therefore, if you are configuring the analyzer on the bench (no loop load) with a HART communicator, you must add a 250 Ω resistor.

Analog Output Wiring

There are two analog (4 to 20 mA) outputs in the analyzer. Connect the Analog 1 output at the MA1+ and MA1- terminals of the analyzer. Connect the Analog 2 output at the MA2+ and MA2- terminals of the analyzer. See Figures 8 and 9. Analog 2 is **not** used when HART I/O communication is employed.

Alarm Wiring

You can wire an external device (for example a light bulb or horn) to the analyzer. Each alarm relay provides a contact closure which can be used as a switch to turn the external device on or off. The way you wire the external device to the analyzer must be done in conjunction with the way you configure the alarm Trip State (see page 60).

— NOTE

Alarm contacts are Form C rated 5 A at 250 V ac, 2 A at 30 V dc, noninductive. The ATEX and IEC limits are 5 A at 160 V ac and 2 A at 30 V dc.

Energized Trip State

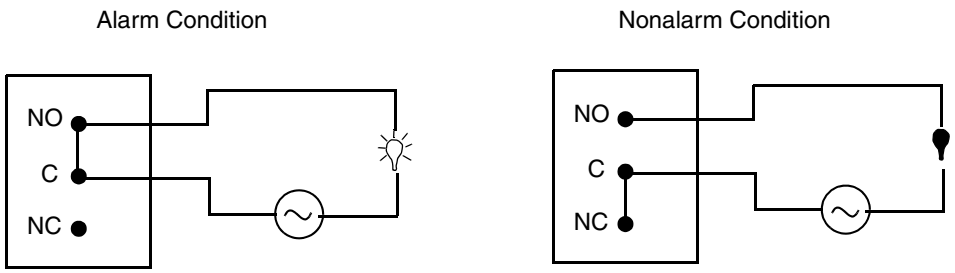

Figure 13. Alarm Wiring in Energized Trip State

De-energized Trip State

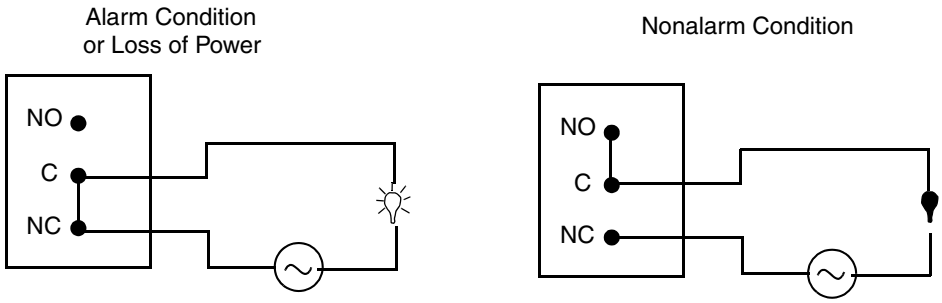

Figure 14. Alarm Wiring in De-energized Trip State

5. Operation Via Local Display

Controls and Indicators

Operator controls and indicators are located on the front panel. Figure 15 shows the panel arrangement. Table 5 identifies the function of each element.

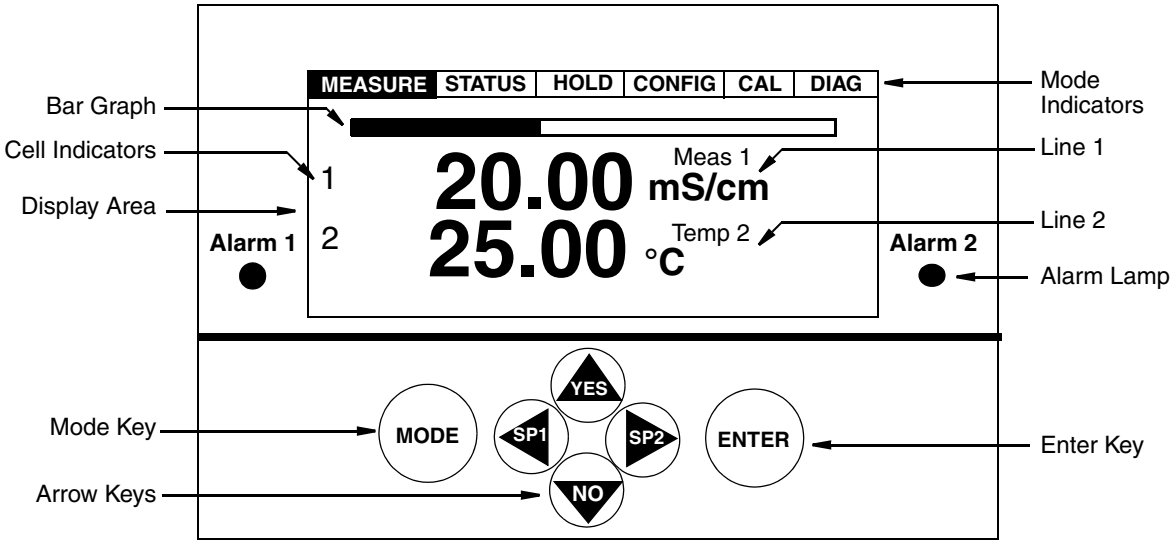

Figure 15. Indicators and Controls

Table 5. Indicators and Controls

Control/Indicator	Function
Mode Indicators	The current operating mode indicator is illuminated. While Hold is active, the Hold indicator blinks.
Display Area	The display is a graphic panel that shows information in combinations of artwork and text.
Bar graph	Displays percent of the configured range of the Line 1 value on the display.
Line 1	Displays configured measurement, mathematical product, or scanned measurement.
Line 2	Displays configured measurements.
Alarm Indicator	Alarm 1 (Alarm 2) indicator is illuminated when Alarm 1 (Alarm 2) is active.
Mode Key	Each press of the **Mode** key selects the next operating mode (Measure, Status, Hold, Configure, Calibrate, and Diagnostic).

Table 5. Indicators and Controls (Continued)

Control/Indicator	Function
Right Arrow Key	Moves you forward through the menu structure. Shifts the cursor to the right in a data entry field When in Measure mode, enables you to directly access the menu to change the setpoint for Alarm 2 (if configured as a setpoint alarm).
Left Arrow Key	Moves you backward through the menu structure. Shifts the cursor to the left in a data entry field When in Measure mode, enables you to directly access the menu to change the setpoint for Alarm 1 (if configured as a setpoint alarm).
Up Arrow Key	Increments a numeric value or character when in a data entry field. Shifts the items down when you are in a picklist menu. Answers Yes to a question.
Down Arrow Key	Decrements a numeric value or character when in a data entry field. Shifts the items up when you are in a picklist menu. Answers No to a question.
Enter Key	Enters and saves the changed menu picklist choices or numeric value or character data entry.

Display

The display is a 240 x 128 pixel dot-matrix LCD. It is backlighted for viewing under low light conditions. There are several types of display screens. The type presented depends on the mode and the information being requested or presented.

Dual Measurement Screen

This screen is displayed in Measure mode when the analyzer is configured for dual line measurements.

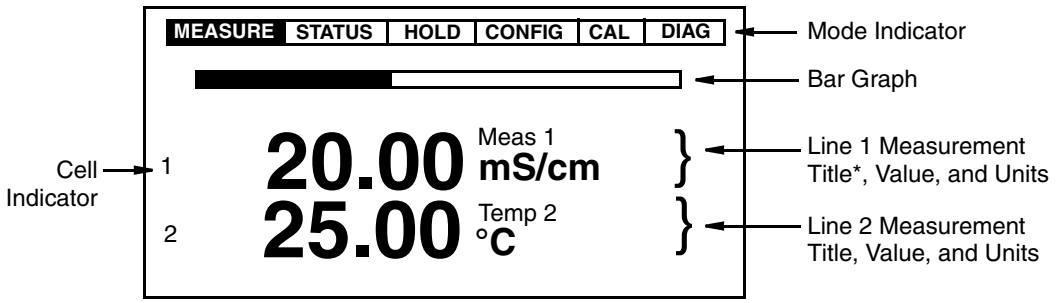

*For single cell applications, Application number instead of Title if Number of Apps >1

Figure 16. Sample Dual Measurement Screen

Single Measurement Screen

This screen is displayed in Measure mode when the analyzer is configured for single line measurements, scanning measurements, or user selectable measurements.

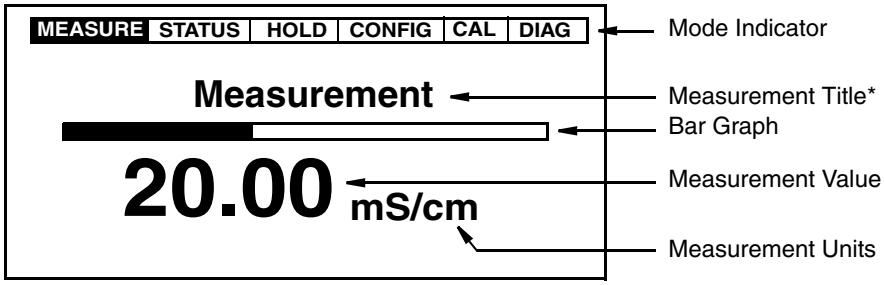

*Application number instead of Title if Number of Apps >1

Figure 17. Sample Single Measurement Screen

Fault Messages

While you are in Measure mode, the display alternates between the Measurement screen and the Fault screen (approximately every five seconds) when a fault is occurring. In the case of multiple faults, the fault with the highest severity is shown. In general, you can enter the Diagnostic mode to obtain more detail about the fault and receive guidance on how to correct the problem or to suspend the message until the problem is corrected. Fault types are summarized below.

— NOTE

Some diagnostic conditions must be configured "enabled" for a fault message to be displayed.

Sensor Fault

Sensor Fault is displayed in Measure mode (if the diagnostic is enabled) when a **Leakage**, **ATC Short**, or **ATC Open** fault is present. The analyzer is still configurable. For **ATC Short** or **ATC Open** faults, temperature measurements are held at the fail-safe value if so configured.

Configuration Fault

Configuration Fault is displayed in Measure mode (if the diagnostic is enabled) when the current loop output (**4-20 Range**), the temperature compensation (**Comp Range**), or the display line measurement (**Meas Range**) exceeds the upper or lower bound for the configured range.

— NOTE

Meas Range is triggered when resistivity measurements fall below the lower 1% of full scale.

Analyzer Fault

Analyzer Fault, which is displayed in Measure mode, indicates an analyzer fault. Depending on the severity of the problem, the analyzer may still be configurable and analog measurements held at the fail-safe value if so configured.

Digital Fault

Digital Fault is displayed in Measure mode when a digital communication problem occurs.

Slope Error

Slope Err is displayed in Configuration mode when errors made during the entry of custom tables cause an invalid slope, such as where slope changes direction.

Scale Error

Scale Error is displayed in Configuration mode when errors are made during entry of custom tables, such as not having at least one base point high enough in the range.

Ref Error

Ref Error is displayed when the **Ref Temp** is not included in a custom temperature compensation curve.

Passcode Access

Analyzer security is provided by the use of passcodes through the front panel, remote control, or digital communication interfaces. The passcodes for three levels of security can be established in Configuration mode by users having access to Level 1. Table 6 defines passcode access to the different features of the analyzer.

The legend for the table is V = View and X = View and/or change.

NOTE

1. Passcode Levels 2 and 3, while less complete that Level 1, are simpler to use because there are fewer selections to step through in the menu trees.
2. The factory default pass code for all three levels is **0800**.

Table 6. Passcode Access

Feature	No Passcode	Level 3	Level 2	Level 1
Measurement Mode				
Measurement	V	V	V	V
Status Mode				
Status	V	V	V	V

Table 6. Passcode Access (Continued)

Feature	No Passcode	Level 3	Level 2	Level 1
Hold Mode				
Off		X	X	X
On Present		X	X	X
On Manual		X	X	X
Configuration Mode				
Cell Mode			V	X
Cell	V	V	V	X
Number of Apps			V	X
Application	V	V	X	X
Measurement	V	V	X	X
Meas Units - Custom			V	X
Temp Comp	V	V	X	X
Custom			V	X
Display	V	V	X	X
Analog	V	V	X	X
HART	V	V	X	X
Alarm		V	X	X
Run Application		V	X	X
Remote			V	X
Cal Parameters			V	X
Automatic Hold			V	X
Diagnostics			V	X
Timeouts			V	X
Date and Time			V	X
Analyzer Names			V	X
Passcode				X
LCD Adjustment			X	X
FactoryDefaults				X
Calibration				
Cell		X	X	X
Solution		X	X	X
Bench		X	X	X
Pure H2O		X	X	X
Custom		X	X	X
Analog n				X
Diagnostics				
View Faults	V	V	V	V

Table 6. Passcode Access (Continued)

Feature	No Passcode	Level 3	Level 2	Level 1
Resume Faults		X	X	X
View History		V	V	V
Demand Report		X	X	X
Erase History				X

Any time a passcode is required, the display shows **Passcode 0000**. Use the arrow keys to enter your passcode. When the proper digits are shown, press the **Enter** key.

The passcode access expires when you change to another mode.

Viewing and Changing Data

In the Status, Hold, Calibration, Configuration, and Diagnostic modes, you need to move through a structure of parameters (using the arrow keys and **Enter** key) to view (and in some modes, to change) the value or status of a particular parameter. To aid you in configuration, structure diagrams are provided in the following sections and in Appendix A.

Note that the **Up** and **Down** arrow keys scroll through a picklist menu in either direction. Also, that the arrow keys can be used to increment one position at a time, or continuously through a menu or string of values by holding the key in the depressed position.

The following example shows how to use the keys to move through the structure, make a picklist selection and a numeric entry. The example used is that of configuring cell constant and temperature measuring device in Configuration mode.

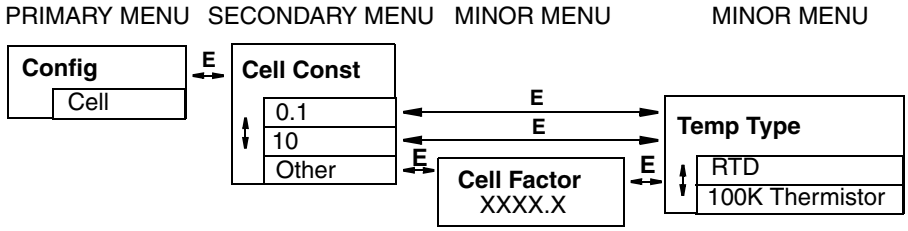

Figure 18. Example of Structure Diagram

1. Use the **Right** arrow key or **Enter** key to move from **Config/Cell** to **Cell Const** on the upper line of the display. The presently configured cell constant is shown in the data entry box.
2. Use the **Up** or **Down** arrow key to move any one of the three picklist selections onto the display (**0.1**, **10**, **Other**). Save your choice by pressing the **Enter** key.

— NOTE

It is important that you save your choice by pressing the **Enter** key. Using the **Left** or **Right** arrow key to view another menu without first pressing the **Enter** key, does not save the new choice but retains the previous choice and routes you in the structure from that point.
For example, if **0.1** was previously selected and you moved to **Other**, pressing the **Right** arrow key instead of the **Enter** key retains a cell constant of **0.1** and routes you from **0.1** to **Temp Type**, not from **Other** to **Cell Factor**.

3. If you chose **Other** and pressed the **Enter** key, **Cell Factor** is shown on the upper line of the display and the current value in the data entry box. The value has five digits plus a leading minus sign (if required) and an embedded decimal point.
4. To make a numeric entry, press the **Left** arrow key to move the cursor under the desired digit.

— NOTE

In most situations, repeatedly pressing the **Left** arrow key returns you to previous menus. However, the **Left** arrow key becomes inoperative for this purpose when entering numerical values.

5. Press the **Up** or **Down** arrow key to increment or decrement the digit respectively. If a leading minus sign is present, positioning the cursor under the sign and pressing the **Up** or **Down** arrow key changes the sign.
6. Press the **Enter** key to save the value entered. The display moves to **Temp Type**.

— NOTE

When you have finished viewing/changing all the secondary and minor menu trees in a section of the structure, the analyzer returns you to a primary or secondary menu tree menu tree. If it returns you to a secondary menu, press the **Left** arrow key to return to the primary menu.

Accessing Operating Modes

The operating mode is selected by pressing the Mode key on the front panel. Each press of the key selects the next operating mode in sequence. See Figure 19. When you reach the desired mode, press **Enter**.

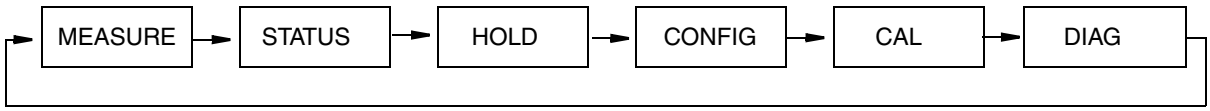

Figure 19. Mode Key Operation

Measure Mode

Measure is the normal operating mode of your analyzer. The analyzer powers up in Measure mode. If another mode is active and you want to go to Measure mode, press the **Mode** key until the **Measure** indicator is illuminated.

Measurements are user configured to display either or both cell's conductivity/resistivity measurement, absolute conductivity value (in mS/m, S/m, µS/cm, mS/cm), absolute resistivity (in kΩ•cm or MΩ•cm), temperature measurement, % rejection, ratio, measurement average, measurement difference, or the analog output value.

Measure mode uses one of four display screen presentations: Single, Dual, Scan, or User Selected. The first three are set in Configure mode. User Selected is accessed in Measure mode by the **Up** and **Down** arrow keys. See Figure 20.

- **Single:** The measurement title (or application running), value, and units are displayed. The bar graph shows the value's percentage of the configured scale.
- **Dual:** The measurement title (or application running), value, and units for two measurements are displayed, each with a cell indicator. The bar graph shows the first line's percentage of the configured scale.
- **Scan:** Several measurements can be selected to alternate on the display in a designated scan time. When the analyzer is in Scan mode, the bar graph is inactive.
- **User Selected:** Any measurement can be temporarily scrolled onto the display by using the **Up** and **Down** arrow keys. The display shows the measurement title, value, and units. The bar graph is inactive. The display returns to the configured values by pressing the **Mode** key or when the Timeout period expires.

When the **Cell Mode** is configured as **Single** or **Redundant**, the analyzer can be configured for up to three applications. You can configure the **Run Application** parameter to display the desired application. In addition, an automatic mode is provided that switches between the three applications depending on the measurement value. Each application must be configured separately before use.

Diagnostics are run continuously in Measure mode. If a fault occurs, the display alternates between the Measurement display and the fault display. In the case of multiple faults, the fault with the highest severity is shown. You can then enter the Diagnostic mode to obtain more detail about the fault and receive guidance on how to correct the problem. The alarm and analog outputs also indicate a fault if so configured. If an alarm is based on a fault, suppressing the fault in Diagnostic mode does not affect the alarm operation.

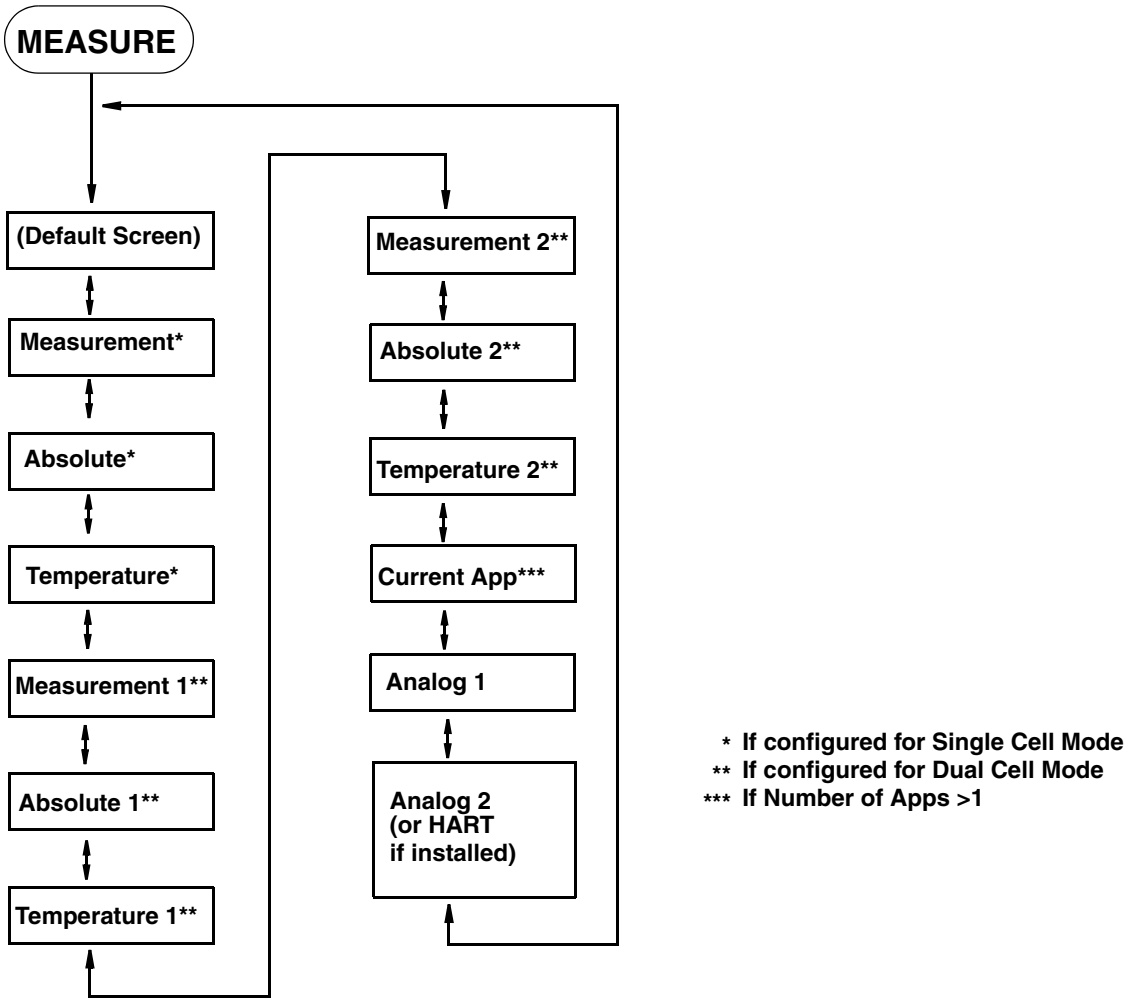

Figure 20. Measure Mode Structure Diagram

You can also view analyzer measurement data on a personal computer by using the Hyperterminal accessory. To do this, connect the RS-232 port on your analyzer to a serial port on your computer. Make sure the port settings on your computer match those on your analyzer. See “Remote” on page 61.

Status Mode

The Status mode enables you to view the measurement and system parameters and thus assess the performance of the loop. You can not edit them in this mode. All measurements and outputs continue while you are in the Status mode.

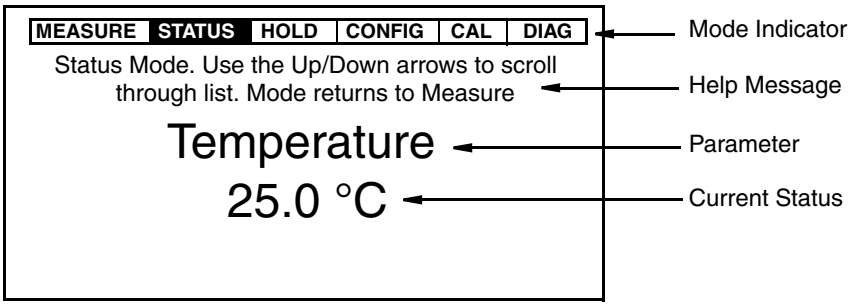

Figure 21. Sample Status Screen

To enter the Status mode, press the **Mode** key until the **Status** indicator is illuminated. Press **Enter**. Move through the menu by using the **Up** and **Down** arrow keys. See Figure 22. The display returns to Measure mode when you press the **Mode** key or when the Timeout period expires. The Status menu contains the following parameters:

Table 7. Status Parameters

Parameter	Description	Units	Notes
Current App	Application number currently running (if number of applications is greater than 1).	- - -	Num Apps > 1
Current Cell	Cell currently running	- - -	If Mode = Redundant
Temperature	Process temperature of Cell 1	Temp Unit	Cell Mode = Single
Absolute	Uncompensated conductivity or resistivity signal from Cell 1	Meas Unit	Cell Mode = Single
ATC Resistance	Resistance of temperature compensator (0.0000 to 9999.9)	Ohms, kilohms	Cell Mode = Single
Cal Person	Name of last calibrator	- - -	Cell Mode = Single
Cal Date	Date of last calibration (mm/dd/yy)	- - -	Cell Mode = Single
Cal Type	Type of last calibration (1 Pt Offset, 1 Pt Span, 2 Point, Pure Water, or Bench)	- - -	Cell Mode = Single
Cal Temp	Temperature calibration type of last calibration (default, TCF, custom, solution, failsafe, manual)	- - -	Cell Mode = Single
Temperature 1	Process temperature of Cell 1	Temp Unit	Cell Mode ≠ Single
Absolute 1	Uncompensated conductivity or resistivity signal from Cell 1	Meas Unit	Cell Mode ≠ Single
ATC Resistance 1	Resistance of temperature compensator (0.0000 to 9999.9)	Ohms, kilohms	Cell Mode ≠ Single
Cal Person 1	Name of last calibrator of Cell 1	- - -	Cell Mode ≠ Single

Table 7. Status Parameters (Continued)

Parameter	Description	Units	Notes
Cal Date 1	Date of last calibration of Cell 1	- - -	Cell Mode ≠ Single
Cal Type 1	Type of last calibration of Cell 1(1 Pt Offset, 1 Pt Span, 2 Point, Pure Water, or Bench)	- - -	Cell Mode ≠ Single
Cal Temp 1	Temperature calibration type of last calibration of Cell 1 (default, TCF, custom, solution, failsafe, manual)	- - -	Cell Mode ≠ Single
Temperature 2	Process temperature of Cell 2	Temp Unit	Cell Mode ≠ Single
Absolute 2	Uncompensated conductivity or resistivity signal from Cell 2	Meas Unit	Cell Mode ≠ Single
ATC Resistance 2	Resistance of temperature compensator (0.0000 to 9999.9)	Ohms, kilohms	Cell Mode ≠ Single
Cal Person 2	Name of last calibrator of Cell 2	- - -	Cell Mode ≠ Single
Cal Date 2	Date of last calibration of Cell 2	- - -	Cell Mode ≠ Single
Cal Type 2	Type of last calibration of Cell 2 (1 Pt Offset, 1 Pt Span, 2 Point, Pure Water, or Bench)	- - -	Cell Mode ≠ Single
Cal Temp 2	Temperature calibration type of last calibration of Cell 2 (default, TCF, custom, solution, failsafe, manual)	- - -	Cell Mode ≠ Single
Analog 1	Analog Output 1	mA	
Analog 2	Analog Output 2 (or HART analog output if installed)	mA	
Tag Name	Tag name	- - -	
Location	Location of measurement	- - -	
Sales Order Number	Sales order number	- - -	
MS Code	Model code	- - -	
Serial Number	Serial number	- - -	
Software Version	Software version	- - -	
Device Name	Device name	- - -	
Device Type	Device type	- - -	
Comm Type	Digital communications type	- - -	
Tag Num	Tag number	- - -	
Line Frequency	ac Line frequency	Hz	
Time	Current time	- - -	
Date	Current date	- - -	
(History Log)	View up to 10 of the most current history log entries (if present)	- - -	0 to 10 entries shown

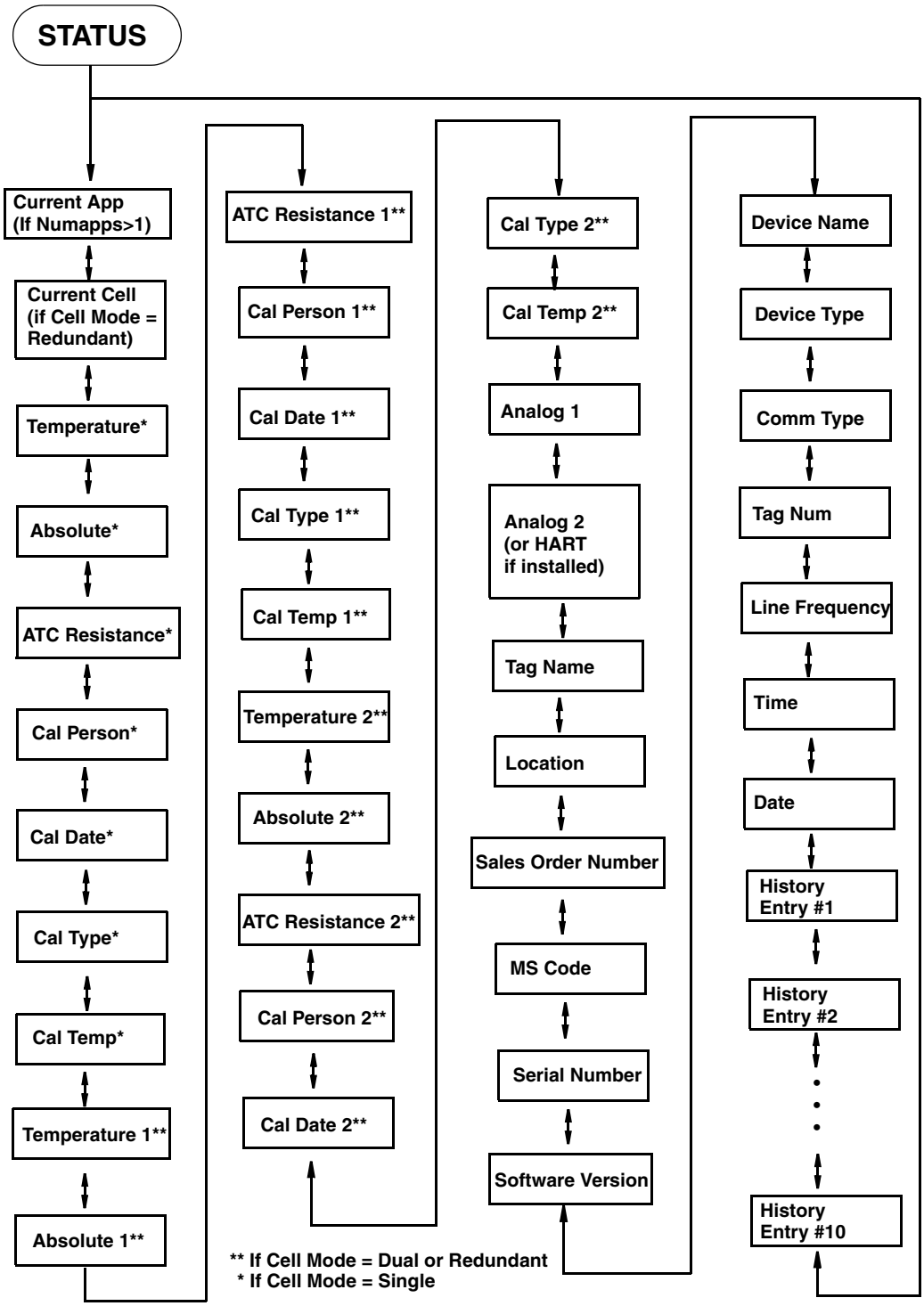

Figure 22. Status Mode Structure Diagram

Hold Mode

Refer to Figure 24.

The Hold mode enables you to manually hold the output at a determined value, thus allowing you to configure or calibrate the analyzer or perform sensor maintenance without disturbing the control loop. Outputs are driven to a preconfigured state or held at their current values. During calibration, the analyzer continues performing live measurements.

To enter the Hold mode, press the **Mode** key until the **Hold** indicator is illuminated. Press **Enter**. At the prompt, **Passcode 0000**, enter the passcode for Level 1, 2, or 3 and then press the **Enter** key. If you enter the incorrect passcode, the display returns to **Passcode 0000**. If you enter the correct passcode, the display briefly reads **Unlocked** and then changes to **Hold Mode/Off**. Refer to Figure 24. In the **Hold Mode** menu, select **On Present** to hold all values and states at their current level or **On Manual** to set all values and states at desired levels.

NOTE

If you entered the passcode for Level 3 and selected **Manual**, you can engage Hold but cannot change the settings under **Manual**.

Additionally, in Configuration mode, you can use the **Automatic Hold** parameter to automatically activate the Hold feature each time you enter Calibration or Configuration mode. In this Configuration mode parameter, you can select **Off**, **Present**, or **Manual**. However, if you select **Manual**, you must go to Hold mode to set the values. Hold mode configuration takes priority over Automatic Hold configuration.

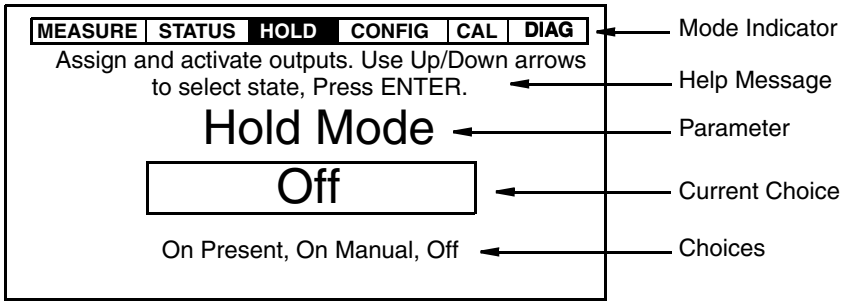

Figure 23. Sample Hold Screen

If you select **On Present** and press the **Enter** key, the display briefly reads **Hold Engaged** and proceeds to Measure mode and the outputs are held.

If you select **On Manual** and press the **Enter** key, the display proceeds to **Alarm 1**, the first of a series of parameters to set values and states to desired levels during hold.

To set the output for **Alarm 1** and **Alarm 2**, select **Maintain** to maintain the alarm in its present condition while in Hold mode, **On** to activate the alarm while in Hold mode, or **Off** to deactivate the alarm while in Hold mode.

To set the output for **Analog 1** and **Analog 2**, select **Live** to not hold the output or **Fixed** to hold the output at a desired value. If you selected **Fixed**, enter a value from 3.8 to 20.5 mA by 0.1 mA increments.

If you have HART or other digital communications installed, you can hold the measurement and temperature values for each digital output at desired values. To do this, enter values for **Digital Measure** and **Digital Temp**. The measurement units are as configured under "Measurement, Measurement n" on page 45. The temperature units are as configured under "Temp Units" on page 45. The value can be from -20 to +200°C (-4 to +392°F) by 0.1° increments.

When you have finished making the manual selections, the display briefly reads **Hold Engaged** and proceeds to Measure mode.

When Hold is engaged, the **Hold** indicator blinks while you are in other modes to indicate that your output is being held. Measurement hold can be maintained indefinitely.

To release Hold, press the **Mode** key until the **Hold** indicator is illuminated. Press **Enter**. At the prompt, **Passcode 0000**, enter the passcode for Level 1, 2, or 3 and then press the **Enter** key. If you enter the incorrect passcode, the display returns to **Passcode 0000**. If you enter the correct passcode, the display briefly reads **Unlocked** and then changes to **Hold Mode/On Present** or **Hold Mode/On Manual**. Use the **Up** or **Down** arrow key to select **Off** and press **Enter**. The display briefly reads **Hold Released** and proceeds to Measure mode.

— NOTE

If using the **Automatic Hold** feature, simply return to Measure mode to release the hold.

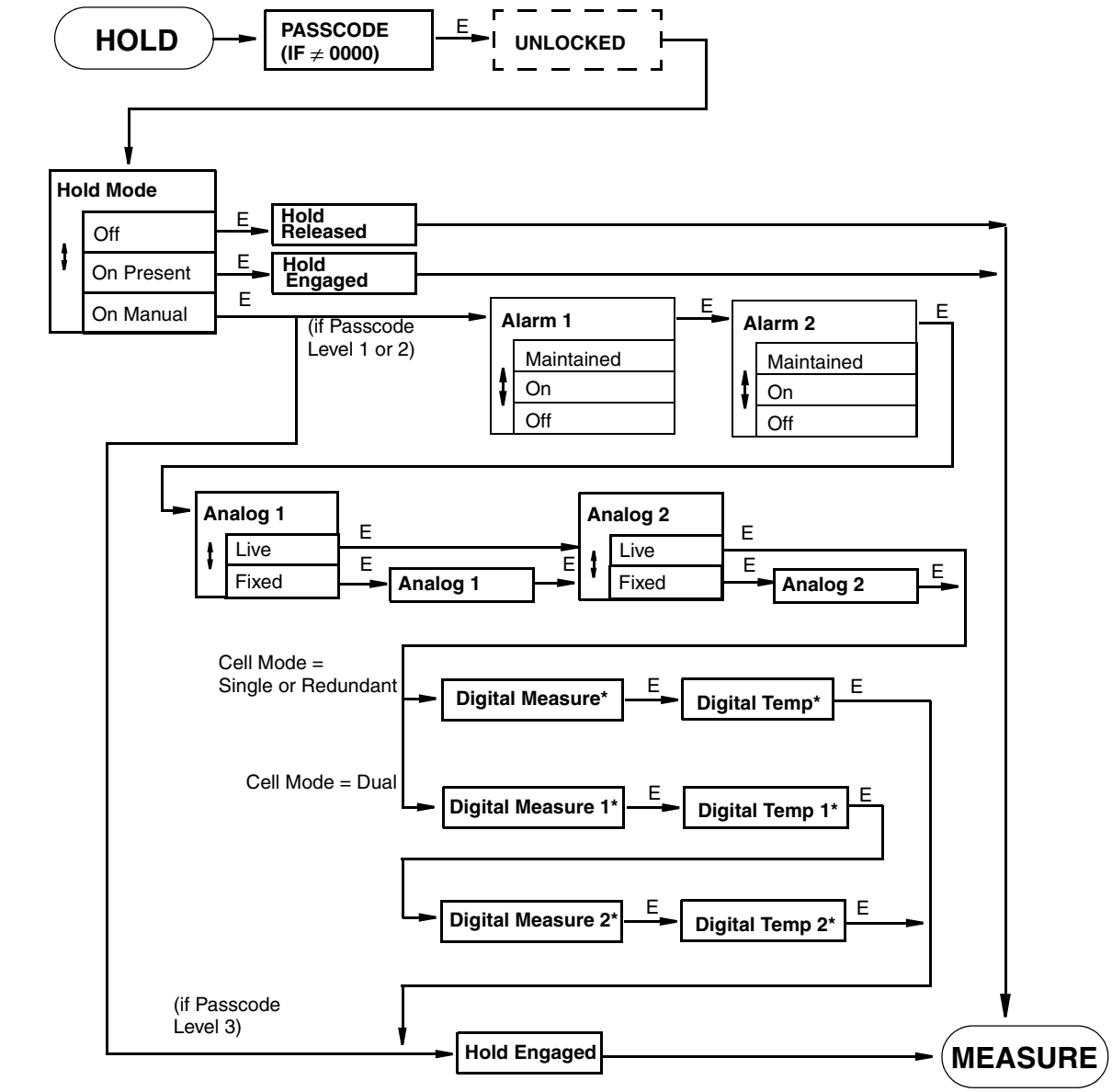

***If digital communications is installed**

Figure 24. Hold Mode Structure Diagram

Calibration Mode

Calibration routines in your analyzer were designed for simplicity and the elimination of faults. Cells and analog outputs are calibrated in this mode. Four cell calibration routines are available. The first routine, **Solution**, calibrates the cell and analyzer together based upon solution conductivity. It enables you to enter or edit the conductivity value(s) of your solution. A single point offset (to bias the measurement by a constant value), single point span (to change the gain or upper value), or two point solution calibration can be performed.

The second routine, **Bench**, is an analyzer only calibration and is accomplished with the use of discrete components or by returning to the stored "factory default" calibration. The third routine, **Pure H2O**, is only used with pure water. It enables you to enter the specific cell factor and temperature cell factor calibration values of your sensor from qualification testing done at the factory. The fourth routine is **Custom**. It can only be accessed via a Level 1 passcode. For information on this routine, please contact IPS.

In addition, **Analog n**, allows you to tune the 4 mA and 20 mA values of the analog outputs.

CAUTION

Do not use Shorts or Opens to calibrate sensor/analyzer system.

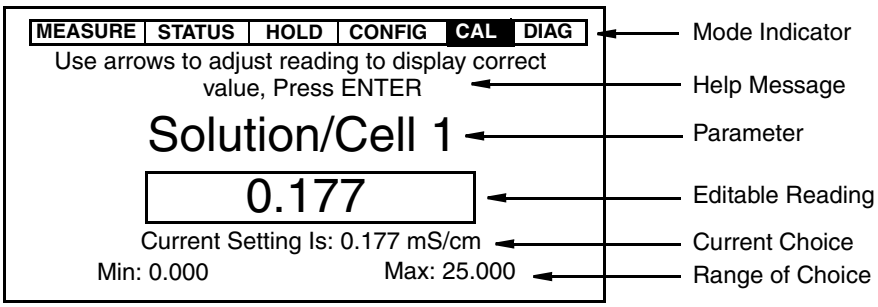

Figure 25. Sample Calibration Screen

To enter the Calibration mode, press the **Mode** key until the **Cal** indicator is illuminated. Press **Enter**. The **Hold** indicator blinks if measurements are held. Use the **Mode** key to exit the Calibration mode and return to Measure mode.

At the prompt, enter the passcode for Levels 1, 2, or 3 and press the **Enter** key. If you enter a correct passcode, the display responds in one of three ways depending on how **Automatic Hold** is configured. If **Automatic Hold** is configured **Off**, the display cautions you that the instrument is not in hold and to press **Enter** to continue or **Mode** to escape. If **Automatic Hold** is configured **Present**, the display cautions that hold is engaged but that outputs are held at the present level. It then unlocks the mode. If **Automatic Hold** is configured **Manual**, the display briefly displays **Hold Engaged** and **Unlocked.**

You are then asked to enter the **Calibrator's Name**. After you do this and press the **Enter** key, the analyzer displays the first category in the top level calibration structure, **Calibrate**. Refer to Figure 26.

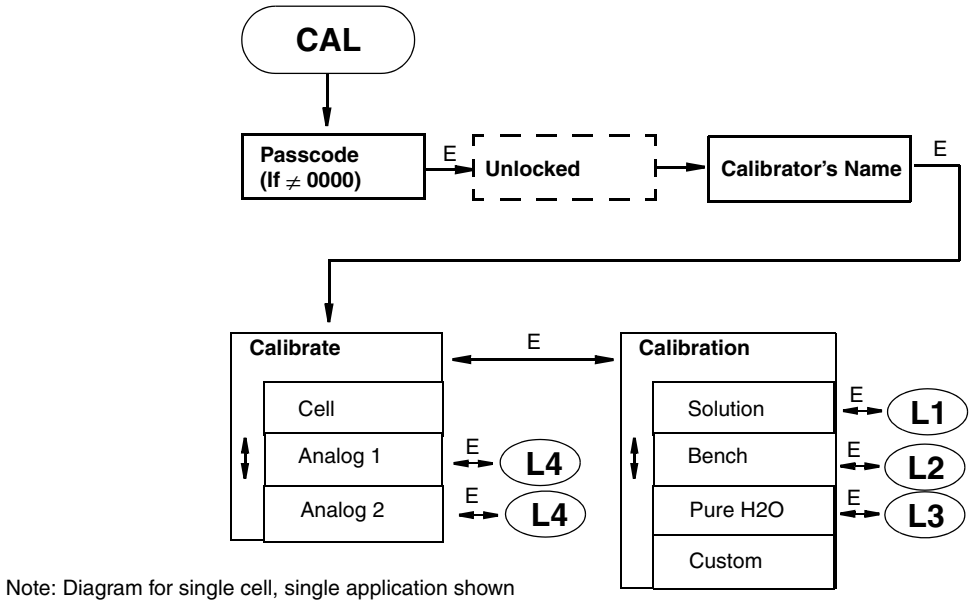

Figure 26. Calibration Category Structure Diagram

Solution Calibration (Conductivity Only)

To perform a solution calibration, select **Cell** (**Cell 1** or **Cell 2** if **Cell Mode** = **Dual**) from the **Calibrate** menu and press **Enter**. The **Calibration** menu is displayed. Select **Solution** and press **Enter** again.

Refer to Figure 27.

If you are using a new (different) sensor, before doing a solution calibration, check that the temperature in Status mode agrees with the actual temperature of your solution. If there is a difference, the actual temperature should be entered before beginning your calibration. To do this, specify **Temp Adj** from the **Solution** menu. Upon the prompt in the Help Message, put your sensor into its solution and press **Enter**. The solution temperature is displayed. If **Meas Stability** is configured **On**, the display reads **Stabilizing** until stability is achieved. When the message disappears, press **Enter**. If **Meas Stability** is configured **Off**, the display reads **Stability Off**. Watch for the measurement to stabilize before proceeding to press **Enter**.

The temperature is now displayed in the edit box. If the reading is not correct, edit it to the correct value and press **Enter**. Values of -20 to 200 °C or -4 to +392 °F in increments of 0.1 can be entered. The units (°C or °F) are determined by your configuration of "Temp Units" on page 45. When finished, press **Enter**. The Help Message advises **Calibration Completed**. Press **Enter** again to return to the **Calibrate** menu. Then select **Cell** and **Solution** as you did before.

From the **Solution** menu, select the **1 Pt Offset**, **1 Pt Span**, or **2 Point** calibration. **1 Pt Offset** is used if correcting for a shift in system zero. **1 Pt Span** is used to correct for a shift in system span and should be used at the higher end of the measurement range chosen.

Upon the prompt in the Help Message, put your sensor into its solution and press **Enter**. The solution conductivity is displayed. If **Meas Stability** is configured **On**, the display reads **Stabilizing** until stability is achieved. When the message disappears, press **Enter**. If **Meas Stability** is configured **Off**, the display reads **Stability Off**. Watch for the measurement to stabilize before proceeding to press **Enter**.

If the reading is not correct, edit it to the correct value and press **Enter**. If the calibration is successful, the display advises **Calibration Completed** (for a 1-point calibration) or to put your sensor into the second solution (for a 2-point calibration). If you are doing a two-point calibration, repeat the procedure. When complete, press **Enter** to return to the **Calibrate** menu or **Mode** to return to Measure mode. If the calibration is unsuccessful, the display advises **Entry Incorrect** and gives you the choice of selecting **Retry** (to return to the point of putting the sensor into the solution) or **Abort** (to return to the **Calibrate** menu).

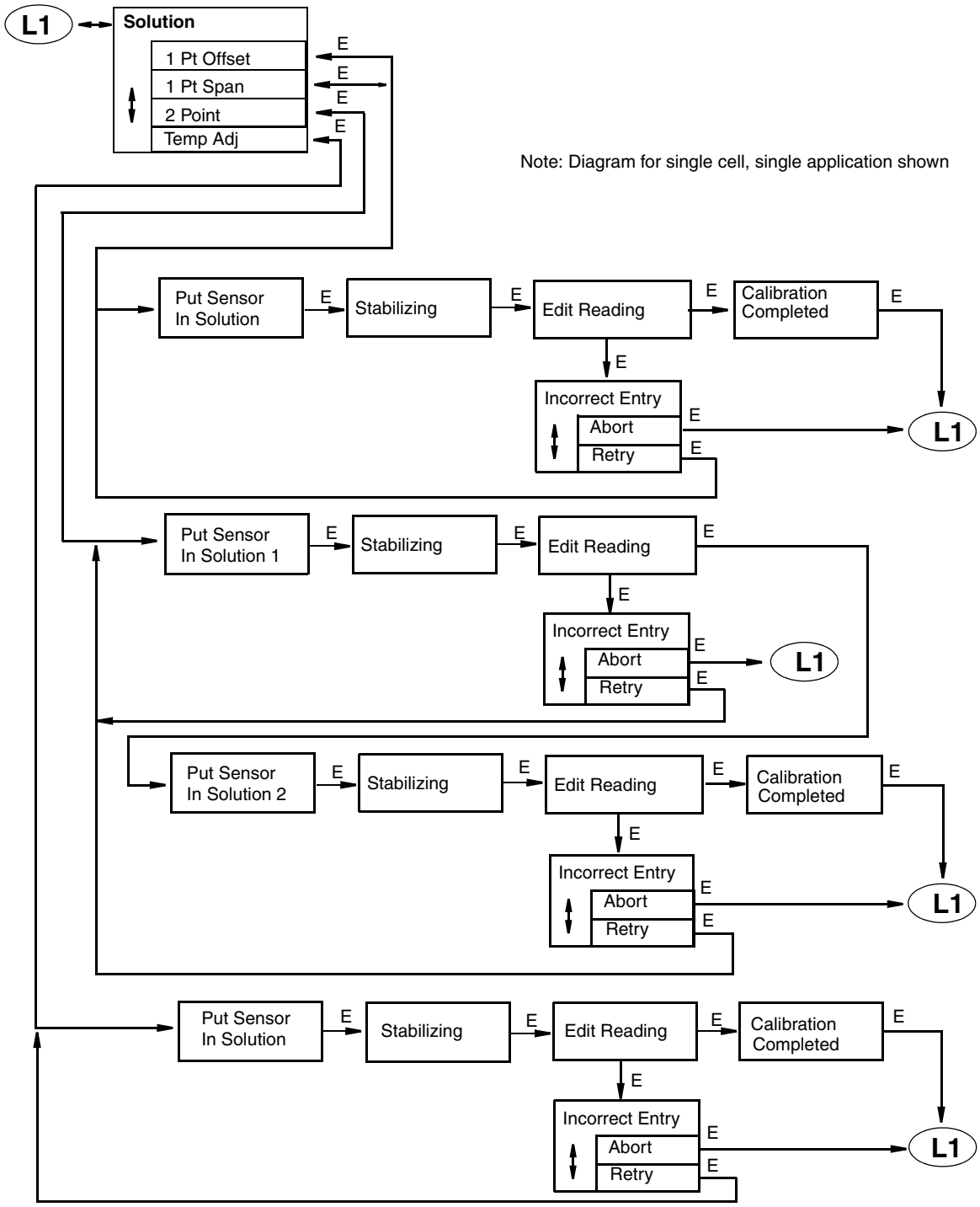

Figure 27. Solution Calibration Structure Diagram

Bench Calibration (Conductivity and Resistivity)

Refer to Figure 28.

If you are doing an instrument calibration, specify **Bench** from the top level calibration structure. Then you have two choices. You can return to the stored factory default calibration by selecting **Default** and pressing **Enter**. However, you can alternatively choose to connect your own calibrating resistors to the analyzer. If so, specify **User** and press **Enter**.

If you selected **User**, upon the prompt in the Help Message, connect your first resistor between terminals 1 and 2 (for the appropriate channel) as shown in Figure 29 and press **Enter**. See the prompt on your display or Table 8 for resistor values.

NOTE

1. Resistance values must be known within 0.01%. Therefore include resistance of leads used.
2. On high resistivity and low conductivity applications, do **not** use decade resistance because capacitance plays a significant role on measurement.

If **Meas Stability** is configured **On**, the display reads **Stabilizing** until stability is achieved. When the message disappears, press **Enter**. If **Meas Stability** is configured **Off**, the display reads **Stability Off**. Watch for the measurement to stabilize before proceeding to press **Enter**.

The actual resistor value should be displayed. If the reading is not correct, edit it to the correct value (to within 0.01%) and press **Enter**. The Help Message prompts you to connect the next resistor in place of the first one and press **Enter**. When complete, press **Enter** to return to the **Calibrate** menu or **Mode** to return to Measure mode.

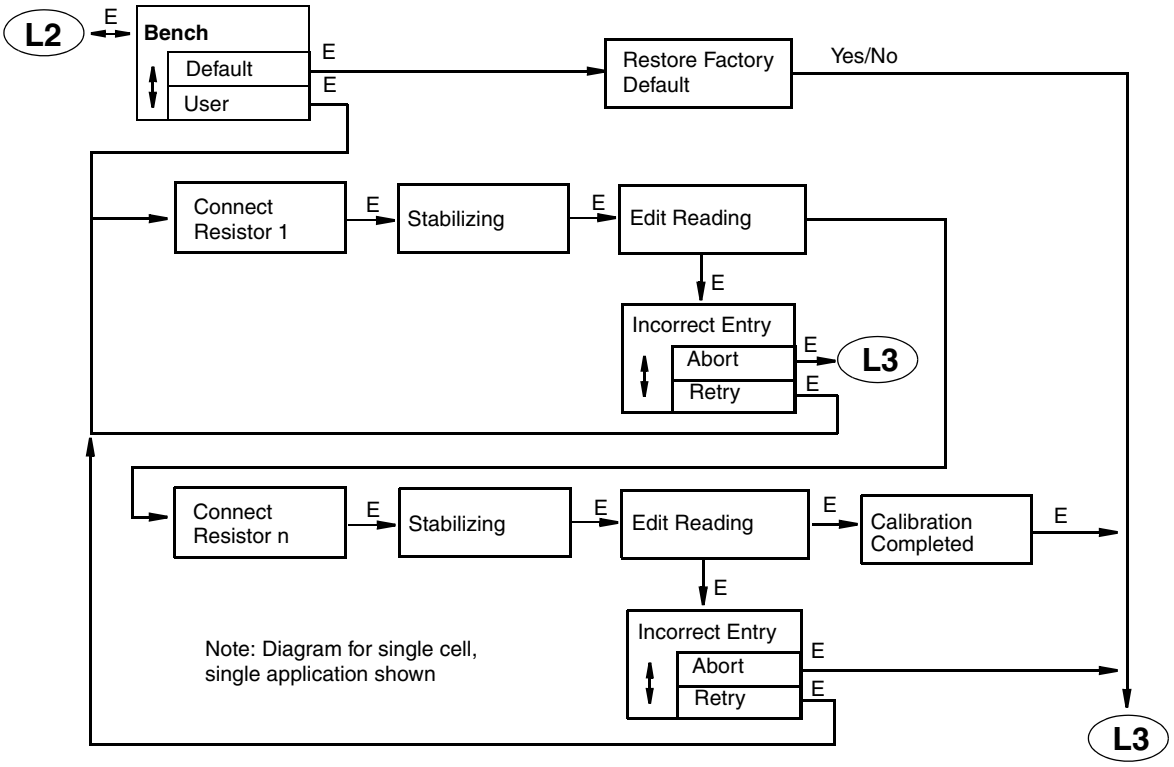

Figure 28. Bench Calibration Structure Diagram

Table 8. Calibration Resistors

Upper Range Value						Resistor Values in Ohms				
µS/cm	mS/m	mS/cm	S/m	MΩ•cm	kΩ•cm	R1	R2	R3	R4	R5
Cell Factor 0.1/cm										
1.000				20.00 10.00		20600	37000	370000	680000	6800000
2.000	0.200			5.000	5000	10300	20600	185000	370000	3330000
5.000	0.500			2.000	2000	4120	7400	74000	133000	1330000
10.00	1.000			1.000	1000	2060	4120	37000	74000	680000
20.00	2.000			0.500	500.0	1030	2060	20600	37000	370000
50.00	5.000			0.200	200.0	412	1030	7400	20600	133000
100.0	10.00	0.100		0.100	100.0	206	412	4120	7400	74000
200.0	20.00	0.200			50.00	103	206	2060	4120	37000
µS/cm	mS/m	mS/cm	S/m	MΩ•cm	kΩ•cm	R1	R2	R3	R4	R5
Cell Factor 10/cm										
100.0	10.00	0.100			200.0 100.0	20600	37000	370000	680000	6800000
200.0	20.00	0.200			50.00	10300	20600	185000	370000	3330000
500.0	50.00	0.500			20.00	4120	7400	74000	133000	1330000
1000	100.0	1.000	100.0		10.00	2060	4120	37000	74000	680000
2000	200.0	2.000	200.0		5.000	1030	2060	20600	37000	370000
5000	500.0	5.000	500.0		2.000	412	1030	7400	20600	133000
	1000	10.00	1000		1.000	206	412	4120	7400	74000
	2000	20.00	2000		0.500	103	206	2060	4120	37000

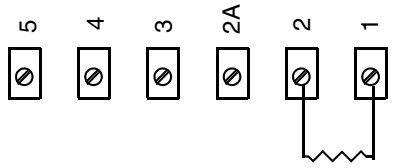

Figure 29. Resistor Connection

Pure H_2O

If you are measuring purity of water by checking the conductivity in µS/cm or resistivity in MΩ•cm, you can use this calibration by selecting **Pure H2O**. The display reads **TCF**. Change the temperature cell factor (TCF) shown to the TCF found on your sensor and press **Enter** again. The display reads **CF**. Change the cell factor (CF) shown to the CF found on your sensor and press **Enter** again. The calibration is complete.

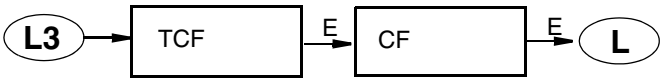

Note: Diagram for single cell shown

Figure 30. Pure Water Calibration Structure Diagram

Analog 1 and Analog 2

This subsection allows you to tune the 4 mA and 20 mA values. The procedure is as follows:

1. Connect a digital current meter between terminals MA1+ and MA1- for Analog 1 and MA2+ and MA2- for Analog 2. See Figure 8 for location.
2. With **Analog n** displayed, press **Enter**. The display changes to **Analog n 4 mA**.
3. Calibration is performed by having your current meter read 4 mA. Do this by selecting the degree of change required, **Course**, **Medium**, or **Fine,** by using the **Left** and **Right** arrow keys and the direction of the change by using the **Up** and **Down** arrow keys. Repeat Step 3 until your meter reads 4 mA. Then press **Enter**. The display advances to **Analog n 20 mA**.
4. Repeat the procedure shown in Step 3 for 20 mA. The current reading should be 20 mA.

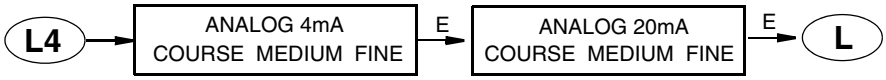

Figure 31. Analog Calibration Structure Diagram

Configuration Mode

Refer to Structure Diagrams in Appendix A.

Configuration is the process of establishing functional capability in the analyzer firmware for your application. This section helps you to systematically determine and configure the value or status of each parameter required for your application. IPS recommends that you make configuration changes from the beginning of the menu structure forward. This is because menus are forward referencing meaning that if you start at the beginning and work to the end, you achieve a valid configuration. Also, the analyzer validates the configuration when attempting to exit configuration and directs you to any invalid menus.

To enter the Configuration mode, press the **Mode** key until the **Config** indicator is illuminated. Press **Enter**. At the prompt, enter the passcode for Levels 1 or 2 and press the **Enter** key. If you

enter an incorrect passcode, the display returns to **Passcode 0000**. If you enter the correct passcode, the display presents a picklist to choose **View** or **Change**. If you entered the Level 3 passcode, you can only view the basic configuration parameters. If you entered the Level 2 passcode, you are allowed to view or change the basic configuration parameters. If you entered the Level 1 passcode, you can view or change any configuration parameter. See Table 6 on page 24 for a listing of passcode access to various configuration parameters.

If you selected **Change**, the display responds in one of three ways depending on how **Automatic Hold** is configured. If **Automatic Hold** is configured **Off**, the display cautions you that the instrument is not in hold and to press **Enter** to continue or **Mode** to escape. If **Automatic Hold** is configured **Present**, the display cautions that hold is engaged but that outputs are held at the present level. It then unlocks the mode. If **Automatic Hold** is configured **Manual**, the display briefly displays **Hold Engaged** and **Unlocked**.

After selecting **View** or **Change**, the first category in the top level configuration structure, **Cell Mode** is displayed. To view or change another configuration category, press the **Up** or **Down** arrow key. When you have located the desired category, press the **Enter** key. Each category of parameters is shown in subsequent structure diagrams.

⚠ CAUTION

If there are no key presses within the configured Timeout period, the analyzer reverts to Measure mode and all changes are lost.

Making a change to one configuration parameter can cause an invalid selection or out-of-range value in one or more other parameters. To assist you in properly configuring the analyzer, prompts are provided guiding you to these out-of-range parameters.

You can exit the Configuration mode and proceed to another mode at any time by pressing the **Mode** key. If you were in **View**, the analyzer goes directly to Measure mode. If you were in **Change**, the analyzer validates the configuration. If your new configuration **does not** contain invalid entries, the display reads **Configuration OK - Save Changes?** Press the **Yes** key to save the changes or **No** key to abort the changes. The analyzer then goes to Measure mode. If your new configuration **does** contain invalid entries, the display reads **Configuration Error - Fix It?** Press the **Yes** key to fix the error or the **No** key to abort the changes. If **Yes**, the analyzer takes you to the first menu in error. Once the error is fixed, the analyzer validates the configuration. If **No**, the analyzer goes to Measure mode. Figure 32 shows the logic involved.

NOTE

Changes are not implemented until they are saved and measure mode is restored.

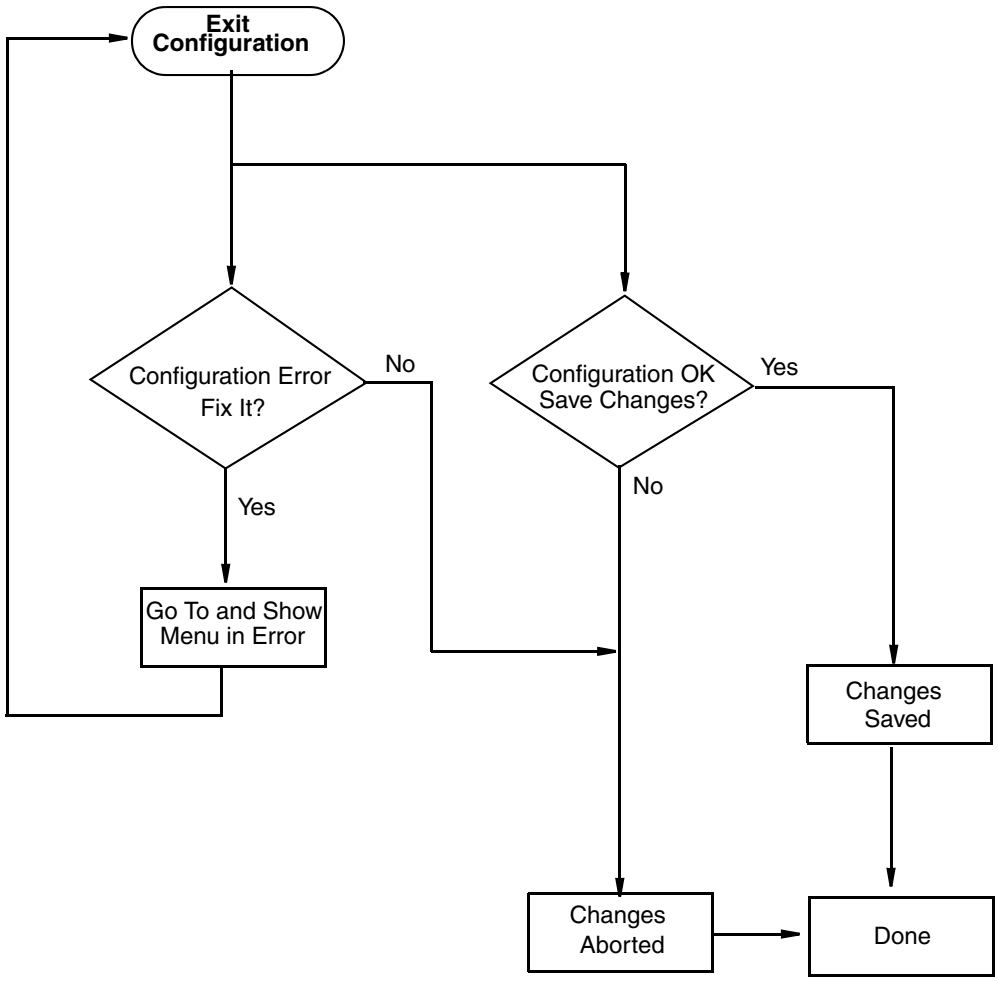

Figure 32. Configuration Mode Exit Flow

Configuration Display

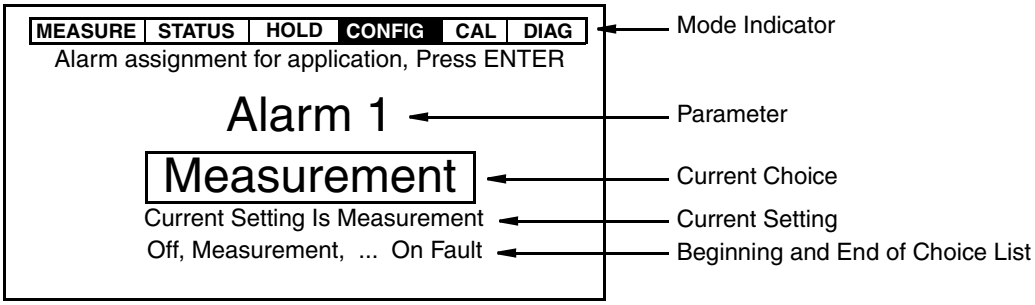

Figure 33. Sample Configuration Screen

Cell Mode

Refer to Figure A-2 on page 82.

The analyzer has a two cell capability. It can be configured for one of three modes.

- **Single** is for using only Cell 1 and allows up to three applications without math operations.
- **Dual** is for using both cells independently and allows each cell a single application with math operations (% rejection, ratio, measurement average, measurement difference, temperature difference). Each cell can have a different cell factor, measurement range, unit, and so forth.
- **Redundant** is primarily used for extra security for critical applications. In this mode, one cell is designated as primary and the other is a backup. If the primary cell measurement becomes suspect or fails, the backup cell can take over. Up to three applications are allowed but both cells must be configured identically.

NOTE

Each cell and application is calibrated separately.

For redundant cell operation, the analyzer must be configured for either **Manual** or **Automatic** switchover (**Switch Over**). One of the cells must also be specified as the primary cell. Configure **Primary Cell** as **1** or **2**.

For **Manual** switchover, the cell selected as the primary cell is analyzed until you manually change your configuration selection. For **Automatic** switchover, a cell fault (leakage, ATC short, or ATC open) causes the configured backup cell to replace the primary cell. A message is briefly shown on the display when this occurs and the fault is placed in the History Log. The secondary cell is used until the fault is corrected. If there are faults on both of the cells, the primary cell remains active.

Cell, Cell 1, and Cell 2

Refer to Figure A-3 on page 82.

This section of the structure asks you to specify the cell constant and the temperature features that are used for all three applications. **Cell** is used when **Cell Mode** is **Single** or **Redundant**. **Cell 1** and **Cell 2** are used when **Cell Mode** is **Dual**.

Cell Const

Specify **Cell Const** as **0.1**, **10**, or **Other**.

If **Other**, specify the **Cell Factor** for each cell. The firmware allows a cell factor entry between 0.0001 and 99.999. Contact IPS regarding the use of other cells with this analyzer.

Temp Type

First, specify the **Temp Type** as **RTD** or **100K Thermistor**.

If you specify the **Temp Type** as **RTD**, specify 2-wire or 3-wire RTD and its resistance value as **2 Wire 100Ω**, **2 Wire 1000Ω**, **3 Wire 100Ω**, **3 Wire 1000Ω**, **2 Wire MIL**, or **3 Wire MIL**.

- For 871CR Sensors use 3 Wire 1000 Ω RTDs
- For 871CC-A...F Sensors use 100K Thermistors
- For 871CC-K through 871CC-M Sensors use 2 Wire 100 Ω RTDs.

Temp Units

Specify **Temp Units** as **Celsius** or **Fahrenheit**. All references to temperature appear in the specified units within the analyzer software.

Temp Mode

Specify the **Temp Mode** as **Automatic** or **Manual**.

In **Automatic** mode, the temperature follows the temperature input RTD or thermistor "ATC" and you can set a temperature fail-safe signal value, **Failsafe Sig** (in case the RTD or thermistor fails) at the temperature at which you expect the process to be operating.

In **Manual** mode, the temperature can be set at a fixed temperature value and resistance inputs on the temperature terminal are ignored.

Number of Apps

Refer to Figure A-4 on page 82.

— NOTE

This parameter appears only when the **Cell Mode** is not **Dual**.

This section of the structure asks you to specify the number of applications you wish to preconfigure. It can be **1**, **2**, or **3**. For more information on this subject, see the following section.

Application, Application n

The 875CR Analyzer can be preconfigured for up to three distinct applications. Each application can have its own display, temperature compensation curve, chemical concentration curve (if applicable), output configuration and alarm configuration. Each application is assigned an identification number (such as 1, 2, or 3).

- **Application** applies if **Cell Mode** = **Dual** or **Cell Mode** ≠**Dual** and **Number of Apps** = **1**.
- **Application 1** applies if **Number of Apps** > **1** and **Cell Mode** ≠ **Dual**.
- **Application 2** applies if **Number of Apps** > **1** and **Cell Mode** ≠ **Dual**.
- **Application 3** applies if **Number of Apps** > **2** and **Cell Mode** ≠ **Dual**.

Measurement, Measurement n

Refer to Figure A-5 on page 83.

This section of the structure asks you to specify the measurement unit, scale, and damping time. If you specify %, you must specify the scale for a particular chemical. If you specify a custom unit, you must specify the chemical compensation, the relationship between conductivity/resistivity units in MΩ•cm, kΩ•cm, µS/cm, mS/cm, mS/m, or S/m and Custom units in %, g/l, ppm, oz/gal, ppt, User Defined, or none.

NOTE

Measurement applies if **Cell Mode** = **Single** or **Redundant**.
Measurement 1 and **Measurement 2** apply if **Cell Mode** = Dual.

You can specify the measurement units (**Meas Units**) as **MΩ•cm**, **kΩ•cm**, **µS/cm**, **mS/cm**, **mS/m**, **S/m**, or **Custom** if **Cell Const** was configured as **0.1**. You can specify **Meas Units** as **kΩ•cm**, **µS/cm**, **mS/cm**, **mS/m**, **S/m**, **%**, or **Custom** if **Cell Const** was configured as **10**.

Measure Unit = MΩ•cm, kΩ•cm, µS/cm, mS/cm, mS/m, or S/m

If you selected **MΩ•cm**, **kΩ•cm**, **µS/cm**, m**S/cm**, **mS/m**, or **S/m** as **Meas Units**, you must specify the **Scale** as indicated in Table 9.

For the best accuracy, pick the lowest scale that has a control point

Table 9. Scale for Units Other than % or Custom

Units	Cell Constant	Scale*
MΩ•cm	0.1	0.1, 0.2, 0.5, 1, 2, 5, 10, 20
	Other	Dependent upon cell constant
kΩ•cm	0.1	50, 100, 500, 1000, 2000, 5000
	10	0.5, 1, 2, 5, 10, 20, 50, 100, 200
	Other	Dependent upon cell constant
mS/m	0.1	0.1, 0.2, 0.5, 1, 2, 5, 10, 20
	10	10, 20, 50, 100, 200, 500, 1000, 2000
	Other	Dependent upon cell constant
S/m	10	0.1, 0.2, 0.5, 1, 2
	Other	Dependent upon cell constant
µS/cm	0.1	1, 2, 5, 10, 20, 50, 100, 200
	10	100, 200, 500, 1000, 2000, 5000
	Other	Dependent upon cell constant
mS/cm	0.1	0.1, 0.2
	10	0.1, 0.2, 0.5, 1, 2, 5, 10, 20
	Other	Dependent upon cell constant

* These scales are temperature compensated upper range settings. In absolute Tempcomp, measurement can exceed scale selected by an approximate factor of five. See Table 10 for some exact upper range settings at different temperatures.

Table 10. Actual Upper Range Settings as a Function of Temperature

Cell Constant	Scale Value	Upper Range Settings as Function of Temperature					
		0 - 30°C	30 - 60°C	60 - 90°C	90 - 120°C	120 - 150°C	150 - 200°C
0.1 cm^{-1}	µS/cm						
	1.000	4.717	2.670	1.885	1.504	1.244	1.000
	2.000	9.434	5.340	3.770	3.007	2.489	2.000
	5.000	9.999	9.999	9.424	7.518	6.222	5.000
	10.00	47.17	26.69	18.84	15.03	12.44	10.00
	20.00	94.34	53.39	37.69	30.07	24.88	20.00
	50.00	99.99	99.99	94.24	75.17	62.22	50.00
	100.0	471.7	266.9	188.5	150.3	124.4	100.0
	200.0	943.4	533.9	376.9	300.7	248.9	200.0
10 cm^{-1}	µS/cm						
	200.0	943.4	533.9	376.9	300.7	248.9	200.0
	mS/cm						
	0.200	0.943	0.534	0.377	0.301	0.249	0.200
	0.500	0.999	0.999	0.942	0.752	0.622	0.500
	1.000	4.717	2.669	1.884	1.503	1.244	1.000
	2.000	9.434	5.339	3.769	3.007	2.488	2.000
	5.000	9.999	9.999	9.424	7.517	6.222	5.000
	10.00	47.17	26.69	18.85	15.03	12.44	10.00
	20.00	94.34	53.39	37.69	30.07	24.89	20.00

An example of how to use Table 10 follows:

You are trying to select the proper scale for an application with a maximum conductivity of 8 µS/cm at 50°C and a sensor with a cell constant of 0.1 cm^{-1}. To achieve the best accuracy, you should select the lowest scale that will work. In the 30 - 60°C column, 9.999 is the smallest number over 8 µS/cm. Therefore, you can select a Scale Value of 5.000 µS/cm.

Meas Units = %

If you selected **Meas Units** = **%**, you must specify the maximum concentration (**Max Conc**) according to the chemical being measured. See Table 11. Select the **Chemical** as **H3PO4** or **CH3COOH** and then enter the **Max Conc**. The reference temperature is 25°C (77°F).

Table 11. Primary Scale in Percent by Weight

Chemical	Max Conc	mS/cm Equivalent at 25°C
Phosphoric Acid (H_3PO_4)	0.1 to 3.0 by 0.1%	0 to 200
Acetic Acid (CH_3OOH)	0.1 to 9.0 by 0.1%	0 to 1.556

For each of these maximum concentrations, the value to the right of the "-" is editable (to tenths resolution) in order to close the span to no less than 10% of the full scale indicated. The span cannot be increased beyond what is shown. Once a span has been selected, the greatest absolute conductivity for that span is validated against the selected cell type.

Meas Units = Custom

If you specified **Meas Units** as **Custom**, you must specify the **Custom Units** as **%** (percent), **g/l** (grams/liter), **ppm** (parts per million), **oz/gal** (ounces per gallon), **ppt** (parts per thousand), **User Defined**, or **(none)**.

Further, you must specify the chemical compensation, the relationship between the conductivity/resistivity units (**Base Units**) and the **Custom Units** of your choice.

The process specific compensation data must be generated or extracted in advance of entering it into the analyzer. We suggest that the data be plotted graphically as well as tabularly to prepare it for entry into your analyzer. See Figure 34.

After specifying the **Custom Units**, select the **Custom Scale** as **.99999**, **0.9999**, **9.9999**, **9.999**, **99.999**, **99.99**, **999.99**, **999.9**, **9999.9**, **9999**, or **99999**. Then specify the **Base Units** as **MΩ•cm**, **kΩ•cm**, **µS/cm**, **mS/cm**, **mS/m**, or **S/m** and the **Base Scale** as **0.9999**, **9.999**, **99.99**, **999.9**, or **9999**. Next, you must specify a number of points (**Num of Pts**) to plot the compensation curve. The number of points can be specified from 2 to 21. Lastly, for each of the number of points specified above, specify a base value (**Base/Pnt n**) and the corresponding custom value (**Custom/Pnt n**).

A maximum or minimum difference between successive concentrations is not required. The intervals do not have to be evenly spaced. We suggest 2 or 3 points be used in linear regions and more data points be used in curved regions. See Figure 35.

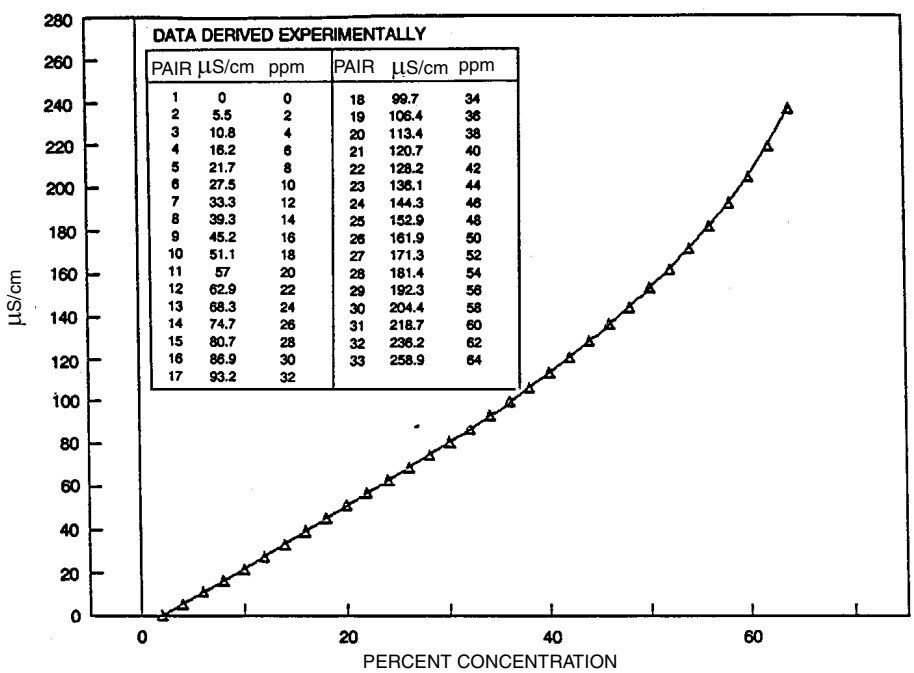

PAIR	µS/cm	ppm	PAIR	µS/cm	ppm
1	0	0	18	99.7	34
2	5.5	2	19	106.4	36
3	10.8	4	20	113.4	38
4	16.2	6	21	120.7	40
5	21.7	8	22	128.2	42
6	27.5	10	23	136.1	44
7	33.3	12	24	144.3	46
8	39.3	14	25	152.9	48
9	45.2	16	26	161.9	50
10	51.1	18	27	171.3	52
11	57	20	28	181.4	54
12	62.9	22	29	192.3	56
13	68.3	24	30	204.4	58
14	74.7	26	31	218.7	60
15	80.7	28	32	236.2	62
16	86.9	30	33	258.9	64
17	93.2	32			

Figure 34. Reference Conductivity vs. Concentration Data

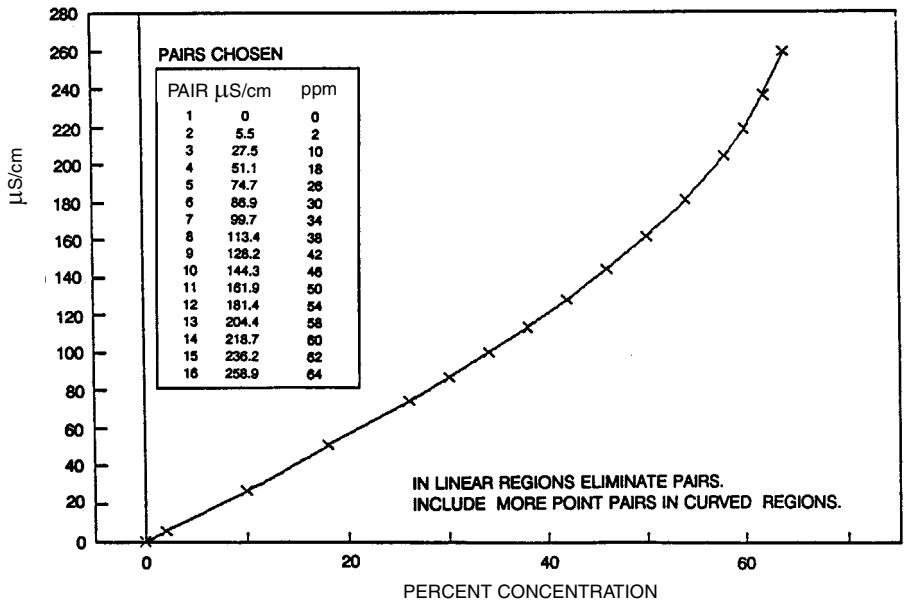

Figure 35. Configured Conductivity vs. Concentration Data

In the example used in Figure 34 and Figure 35, the 33 reference points were reduced to 16 configured points. The configuration procedure would have been as follows:

1. Specify your **Meas Units** as **Custom** and **Custom Units** as **ppm**.
2. Specify the scale of your custom units. For this example, because they are from 0 to 64 percent concentration and the degree of accuracy is only required in whole units of percent, specify **Custom Scale** as **9999.**
3. Specify the **Base Units**. For this example, µ**S/cm**.
4. Specify the scale of your base values. For this example, because they are from 0 to 258.9, specify **Base Scale** as **999.9**.
5. Specify the number of points (**Num of Pts**) on your curve. For this example, **16**.
6. Specify the sixteen point pairs.

— NOTE

When entering data, remember to check the ± sign at the left of your display.

Damping

This section of the structure asks you to specify the **Damping** response time (for 90% recovery from an input step). Choices are **None**, **5**, **10**, **20**, **40**, and **120** seconds. To increase damping, use a higher response time. Damping applies only to measurement data, not to temperature data.

Temp Comp, Temp Comp n

Refer to Figure A-6 on page 84.

Conductivity and resistivity measurements change as a result of ionic contaminants and temperature (heat causes ions to have more mobility in solutions, hence increasing the solution conductivity). Temperature compensation permits measurements to be made with minimal influence from temperature. Temperature compensation adjusts the measurement to a reading equivalent to that at the reference temperature (typically 25°C). For example, the resistivity of ultrapure water at 25°C is 18.18 MΩ•cm. The resistivity of ultrapure water at 30°C is 14.08 MΩ•cm. By compensating the resistivity reading, the value of pure water always reads 18.18 MΩ•cm.

This section of the structure asks you to specify the temperature compensation for your application.

- Temp Comp applies if Cell Mode ≠Dual.
- Temp Comp 1 and Temp Comp 2 apply if Cell Mode = Dual.

— NOTE

This parameter does not appear if **Meas Units** was configured as percent (**%**) since the analyzer applies the appropriate compensation automatically.

Meas Unit Configured kΩ•cm, μS/cm, mS/cm mS/m, or S/m

If **Meas Units** was configured as **kΩ•cm**, **mS/m**. **S/m**, **μS/cm**, or **mS/cm**, you are first asked to specify the mode as **Lo Conductivity**, **Cation**, **NaCl**, **Linear**, **H3PO4**, **CH3COOH**, **USP23/24**, **Ammonia**, **Morpholine**, **Custom**, or **Absolute (none)**. Additional information about each is given in Table 12.

Table 12. Temperature Compensations

Tempcomp Menu	Additional Information	Valid Temperature Range
Lo Conductivity Ions + water Ions	 Sodium Chloride + water (25°C Ref) Sodium Chloride (25°C Ref)	0 to 200°C (32 to 390°F)
Cation	Only applicable for 1, 2, 5, or 10 μS/cm	0 to 100°C (32 to 212°F)
NaCl	Sodium Chloride	0 to 200°C (32 to 390°F)
Linear	- - -	All Ranges
H3PO4	Phosphoric Acid (25°C Ref)(0-3%)	5 to 90°C (40 to 200°F)
CH3COOH	Acetic Acid (25°C Ref) (0-8%)	5 to 120°C (40 to 250°F)
USP23/24	NH_3/NaCl (25°C Ref)	0 to 100°C (32 to 212°F)
Ammonia	NH_3 (25°C Ref)	0 to 100°C (32 to 212°F)
Morpholine	Morphaline (25°C Ref)	0 to 100°C (32 to 212°F)
Custom	- - -	Varies per situation
Absolute	No Temp Comp applied	N/A

Lo Conductivity This compensation is a choice of several nonlinear temperature compensations based upon trace NaCl (ionic contaminants) and the value of ultrapure water (from various sources). You must first choose between **Ions** and **Ions + H2O**.

Selecting **Ions** causes the instrument to follow temperature compensation for a sodium chloride salt and causes the conductivity reading to remove the conductivity due to water. An ultrapure water sample reads 0.00 µS/cm at 25°C (instead of 0.055µS/cm). This type of compensation matches that used in 873ACC, 873CC, or 874CC Foxboro instruments.

Selecting **Ions + H_2O** causes the conductivity reading to include that due to both the water and impurities. If you selected **Ions + H2O**, you must specify one of three pure water curves, **T.Light**, **Foxboro/Light**, or **M & S** (Marsh & Stokes). The actual value of water differs very little at measurements near 25°C. The most current pure water data and the 875CR default, **T.Light**, is based on the published work of Ted Light & Thornton, published in Ultrapure Water, December 1994. **Foxboro/Light** was published as T.S.L., Analytical Chemistry, 1984. **M & S** is derived from Australian Journal of Chemistry, 1964, 17, pp740-9. In the 875CR Analyzer, the **T.Light** curve does not use a look up table. Thus, it presents a continuous temperature correction.

— NOTE

For most applications involving natural and treated water in which neutral salts are responsible for the conductivity, use **Lo Conductivity** -> **Ions + H2O** -> **T.Light**.

NaCl is based upon pure water with the neutral salt, sodium chloride, used as the primary ionic contaminant. This compensation can be used with measurements above 50 µS/cm and with solution temperatures between 0 and 200°C (32 and 390°F).

Linear can be used when other compensation choices are not appropriate for your application. By entering a linear slope value that is representive of your solution's conductivity change with temperature, your analyzer multiplies the factor entered by the temperature deviation times the absolute conductivity. Therefore, if you selected **Linear**, enter the reference temperature (**Ref Temp**) and specify the slope of the linear compensation curve (**Lin Slope**) between 0.5 and 5.0 %/°C.

Cation This compensation is used for process waters with trace acid as is found in boiler feed and steam samples from steam power plants (called cation conductivity or acid conductance). With this compensation, your analyzer corrects the conductivity to that of the solution at 25°C (77°F) using a compensation algorithm based on dilute HCl. This compensation can be used with solution temperatures between 0 and 100°C (32 and 212°F) and with solution conductivities between 0 and 10 µS/cm.

H3PO4 This compensation is based upon pure water with trace Phosphoric acid considered as the primary acidic contaminant. Phosphoric acid is sometimes used in CIP operations. This compensation is used with measurements above 10 µS/cm and with solution temperatures between 5 and 90°C (40 and 200°F).

CH3COOH This compensation is based upon pure water with dilute acetic acid used as the primary acidic contaminant. Acetic acid is sometimes used in CIP (clean in place) operations. This compensation is optimized for measurements above 10 µS/cm and can be used with solution temperatures between 5 and 120°C (40 and 250°F).

USP23/24 This compensation is based upon USP23/24 (United States Pharmacopoeia) limits. These limits are for "water for injection" samples and are based upon conductivity changes as a

result of temperature for pure water with traces of both NaCl and NH_3. This compensation can be used with solution temperatures between 0 and 100°C (32 and 212°F).

— NOTE

1. The USP23/24 directive suggests uncompensated (absolute) conductivity and temperature be read directly from the display. Since the display is configured separately (see "Display" on page 54), both measurements can be displayed as suggested.
2. Using the USP23/24 compensation permits alarms and outputs to use temperature compensation based on USP23/USP24 limits.

Ammonia This power industry compensation is based upon pure water with trace NH_3 as found in cycle chemistry sample in power plants. This compensation can be used with solution temperatures between 0 and 100°C (32 and 212°F).

Morpholine This power industry compensation is based upon pure water with trace Morpholine as found in cycle chemistry sample in power plants. This compensation can be used with solution temperatures between 0 and 100°C (32 and 212°F).

Custom If you selected this compensation, the prompts ask you to specify a reference temperature (**Ref Temp**) and a number of points (**Num of Pts**) to plot a compensation curve. The process specific compensation data must be generated or extracted in advance of entering it into the analyzer. We suggest that the data be plotted graphically as well as tabularly to prepare it for entry into your analyzer. See Figure 36.

In entering the data, **Num of Pts**) can be specified from 2 to 21 points. Each point specifies a conductivity value at a certain temperature. The **Temp/Pnt n** can be specified between -20 and +200°F or -4 to+392°C by in 0.1° increments. The temperature units (Celsius or Fahrenheit) are specified under "Temp Units" on page 45. The **Value/Pnt n** can be specified from 0 to five times the scale value chosen.

— NOTE

When entering data, remember to check the ± sign at the left of your display.

The data should be input to the analyzer with increasing values of temperature.

— NOTE

1. The temperature values must be entered in increasing or decreasing order or the display will read **Slope Error**.
2. Actual database saving of the compensation table is not performed until the last point pair is entered.

A maximum or minimum temperature difference between successive temperatures is not required. The intervals do not have to be evenly spaced. We suggest 2 or 3 points be used in linear regions and more data points be used in curved regions. See Figure 36 and Figure 37.

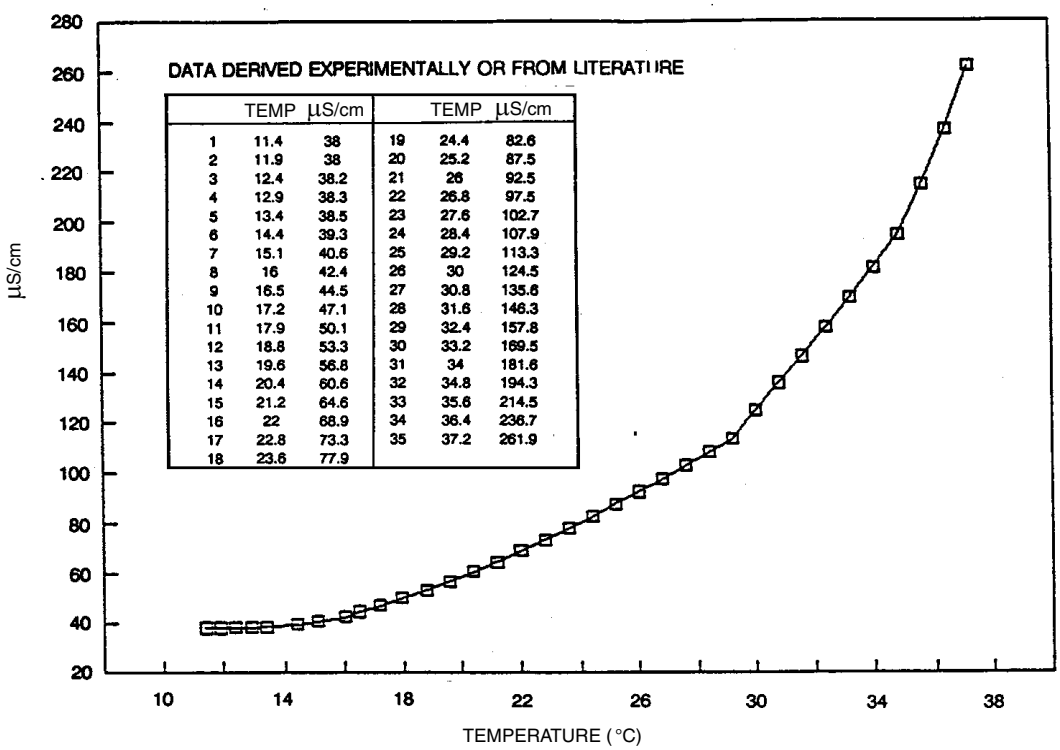

	TEMP	µS/cm		TEMP	µS/cm
1	11.4	38	19	24.4	82.6
2	11.9	38	20	25.2	87.5
3	12.4	38.2	21	26	92.5
4	12.9	38.3	22	26.8	97.5
5	13.4	38.5	23	27.6	102.7
6	14.4	39.3	24	28.4	107.9
7	15.1	40.6	25	29.2	113.3
8	16	42.4	26	30	124.5
9	16.5	44.5	27	30.8	135.6
10	17.2	47.1	28	31.6	146.3
11	17.9	50.1	29	32.4	157.8
12	18.8	53.3	30	33.2	169.5
13	19.6	56.8	31	34	181.6
14	20.4	60.6	32	34.8	194.3
15	21.2	64.6	33	35.6	214.5
16	22	68.9	34	36.4	236.7
17	22.8	73.3	35	37.2	261.9
18	23.6	77.9			

Figure 36. Reference Conductivity vs. Temperature Data

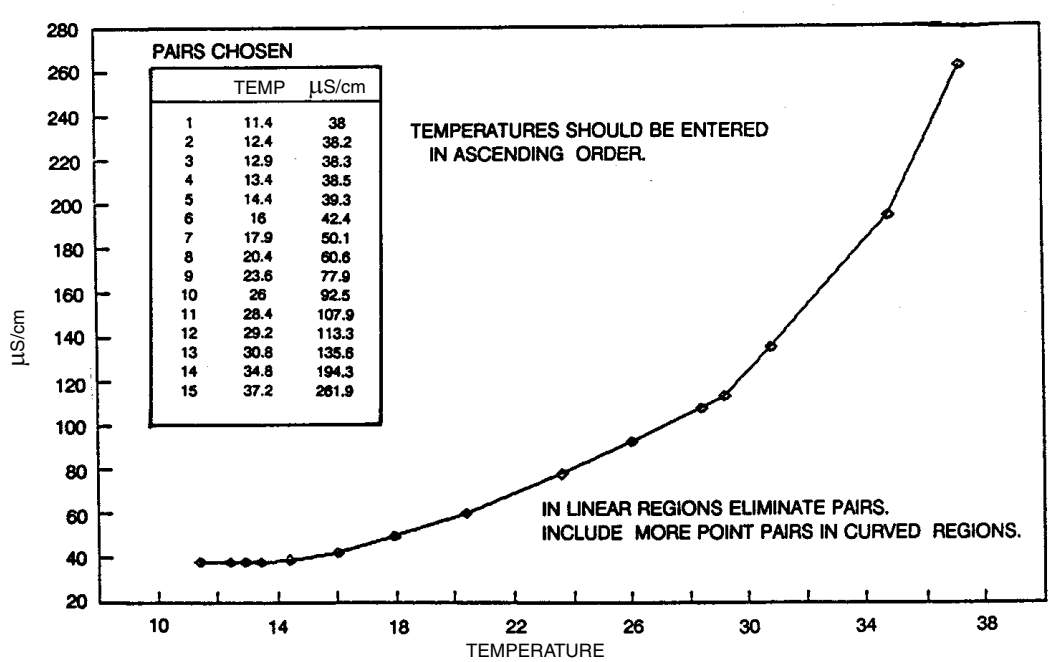

	TEMP	µS/cm
1	11.4	38
2	12.4	38.2
3	12.9	38.3
4	13.4	38.5
5	14.4	39.3
6	16	42.4
7	17.9	50.1
8	20.4	60.6
9	23.6	77.9
10	26	92.5
11	28.4	107.9
12	29.2	113.3
13	30.8	135.6
14	34.8	194.3
15	37.2	261.9

Figure 37. Configured Conductivity vs. Temperature Data

In the example used in Figure 36 and Figure 37, the 35 reference points were reduced to 15 configured points. The configuration procedure would have been as follows:

1. Specify the reference temperature. For this example, 25°C.
2. Specify the number of points on your curve. For this example, 15.
3. Specify the fifteen point pairs.

Absolute This selection means that there is no temperature compensation applied. The displayed value can exceed the scale by approximately five times (5X).

Measure Unit Configured MΩ•cm

If **Meas Units** was configured as **MΩ•cm**, you are first asked to specify an **Absolute**, **Ultra Pure**, **USP23/24**, or **Custom** temperature compensation.

Absolute This selection means that there is no temperature compensation applied. The displayed value can exceed the scale by approximately five times (5X).

Ultra Pure If you selected this compensation, you must specify one of four pure water curves, **T.Light**, **Foxboro/Light**, **M & S** (Marsh & Stokes), or **High Temp**. The most current pure water data and the 875CR default, **T.Light**, is based on the published work of Ted Light & Thornton, published in Ultrapure Water, December 1994. **Foxboro/Light** was published as T.S.L., Analytical Chemistry, 1984. **M & S** is derived from Australian Journal of Chemistry, 1964, 17, pp740-9. **High Temp** is based on empirical data collected in extensive tests conducted at temperatures above 75°C. In the 875CR Analyzer, the **T.Light** curve does not use a look up table. Thus, it presents a continuous temperature correction.

USP23/24 See explanation above.

Custom See explanation above.

Display

(Refer to Figure A-7 on page 85.)

In Measure mode, the display normally shows the information configured in this section. First you must specify the **Line Mode**. The choices are:

- **Single:** The measurement title, value, and unit are displayed. If more than one application is configured, the application number replaces the measurement title. The bar graph shows the percent of the configured range of the value on the display.
- **Dual:** Two measurement titles, values, and units are displayed. If more than one application is configured, the application number replaces the Line 1 measurement title. The bar graph shows the percent of the configured range of the Line 1 value on the display.
- **Scan:** Several measurements can be selected to show in sequence on the display in a designated scan time. When in Scan mode, the bar graph is inactive.

If in **Single Line Mode**, you must select in the **Line** parameter the measurement or calculation you want shown on the display. If in **Dual Line Mode**, you must select in the **Line 1** and **Line 2** parameters the measurements or calculations you want shown on the display. Choose from the selections in Table 13.

Table 13. Display Configuration

Selection	Description
Measurement	The conductivity/resistivity measurement if Cell Mode ≠ Dual
Temperature	The temperature measurement if Cell Mode ≠ Dual
Absolute	The absolute value of the measurement in conductivity units if Cell Mode ≠ Dual
Measurement 1	The conductivity/resistivity measurement of Cell 1 if Cell Mode = Dual
Temperature 1	The temperature measurement of Cell 1 if Cell Mode = Dual
Absolute 1	The absolute value of the measurement in conductivity units of Cell 1 if Cell Mode = Dual
Measurement 2	The conductivity/resistivity measurement of Cell 2 if Cell Mode = Dual
Temperature 2	The temperate measurement of Cell 2 if Cell Mode = Dual
Absolute 2	The absolute value of the measurement in conductivity units of Cell 2 if Cell Mode = Dual
% Rejection	Percent rejection for conductivity is the calculation [1-(cell2/cell1)] x 100; for resistivity, the calculation [1-(cell1/cell2)] x 100. It is only available if Cell Mode = Dual.
Ratio	Ratio for conductivity is the calculation (cell2/cell1) x 100; for resistivity, the calculation (cell1/cell2) x 100. It is only available if Cell Mode = Dual.
Meas Average	Average is the calculation (cell1 + cell2) / 2. It is only available if Cell Mode = Dual.
Meas Difference	Difference for conductivity is the calculation cell1 - cell2; for resistivity, the calculation cell2 - cell1. It is only available if Cell Mode = Dual.
Temp Difference	Difference for temperature is the calculation cell1 - cell2; for resistivity, the calculation cell2 - cell1. It is only available if Cell Mode = Dual. Note: this selection does not apply to scan data.
Analog 1	Analog Output 1
Analog 2	Analog Output 2 (or HART analog output if installed)

Next, enter the minimum (**Bargraph Min**) and maximum (**Bargraph Max**) bar graph values for the measurement or calculation you selected in **Line** or **Line 1**. See Table 14 for the scale and units that apply to each selection.

Table 14. Bar Graph Configuration

Selection	Unit	Scale
Measurement, Measurement 1, Measurement 2, Absolute, Absolute 1, Absolute 2, Meas Average, Meas Difference	Per Measure Unit on page 46	Per Scale on page 46

Table 14. Bar Graph Configuration (Continued)

Selection	Unit	Scale
Temperature, Temperature 1, Temperature 2	Per Temp Unit on page 45	-20 to +200 by 0.1 if °C -4 to +392 by 0.1 if °F
Temp Difference	Per Temp Unit on page 45	-20 to +200 by 0.1 if °C -4 to +392 by 0.1 if °F
% Rejection	%	-500 to +500 by 0.01
Ratio	none	Not Applicable

If in **Scan Mode**, you must specify which measurements or calculations you want to display in sequence (**Scan Data**) and the **Scan Time**. The Scan Data selections are from the list shown in Table 13. The **Scan Time** choices are **2**, **5**, **10**, and **20** seconds.

Choices are selected or deselected by presenting a choice on the display and pressing the **Enter** key. The selected choices appear on the menu preceded by a check mark (√). When you have finished making your selections, choose **Exit**.

Analog 1 and Analog 2

Refer to Figure A-8 on page 86.

There are two analog outputs in the analyzer, **Analog 1** and **Analog 2**. Each analog output is configured independently. On power-up and after configuration changes, the output reflects the fail-safe value as configured until the analyzer has stabilized and has passed the first damping factor.

This section of the structure enables you to specify what measurement or calculation each analog output reflects, the minimum and maximum range values for the outputs just specified, and a fail-safe signal for each output.

Measurement/Calculation

For each analog output (**Analog n**), specify the 4 to 20 mA output to represent one of the following measurements or calculations: **Measurement**, **Temperature**, or **Absolute** (if **Cell Mode** = **Single** or **Redundant**); **Measurement 1**, **Temperature 1**, **Absolute 1**, **Measurement 2**, **Temperature 2**, **Absolute 2**, **% Rejection**, **Ratio**, **Meas Average**, or **Meas Difference** (if **Cell Mode** = **Dual**). You can also specify **Off** if you are not using the output.

Output Range

The nominal output measurement currents are 4 mA and 20 mA. Both can be configured to any measurement value. When the 4 mA level represents the measurement highest value and 20 mA represents the measurement lowest value, the outputs are reverse acting.

Enter the minimum (**Min mA/Ana n**) and maximum (**Max mA/Ana n**) range values for the output just specified. See Table 14 for the scale and units that apply to each selection. There must be a minimum difference of 5% between the minimum and maximum values. The analog output range can be set up to approximately five times the primary scale chosen.

In situations of multiple applications (**Number of Apps** >1), you must enter the minimum (**Min mA/App n/Ana n**) and maximum (**Max mA/App n/Ana n**) range values for each application and the mA output (**mA min/App n/Ana n** and **mA max/App n.Ana n**) at those range values.

Failsafe Output

A fail-safe output is delivered for all analyzer faults and for critical cell diagnostic faults when so configured. Select **Off** under **Failsaf/Ana n** to disable this feature. Select **On** to specify a fixed output when in a failed condition. Select **Pulse** if you want to have this signal outputted with a pulsed saw-tooth waveform of 0.5 mA (as shown below) for greater visibility on a chart recorder or data display. The waveform has a frequency of 10 Hz with 10 steps of 0.1 mA increments.

If **On** is selected, further specify the **DC mA/Ana n** output between 3.8 and 20.5 mA. If **Pulse** is selected, further specify the **Avg mA/Ana n** output between 3.8 and 20.5 mA.

An example of how to use this feature follows:

Suppose you are using your 4 to 20 mA signal to control a valve that diverts high conductivity water. You also wish to divert the flow if the measurement system is suspect due to a configuration fault. To configure your analyzer to do this:

1. Configure your output so that 20 mA is the upper limit of acceptable water before diverting flow.
2. Configure **Failsaf/Ana 1** as **On** and set the **DC mA/Ana n** value as 20.5.
3. In **Diagnostic**, enable the **4-20 Range**, **Comp Rng**, and **Meas Rng** selections and disable the **Leakage**, **ATC Open**, and **ATC Short** selections.

HART Analog

Refer to Figure A-9 on page 87.

The analyzer can have an optional communication module that allow measurement, status, and configuration information to be exchanged between the analyzer and the connected host. HART is one of these modules.

The **HART Analog** parameter enables you to specify what measurement the analog output reflects, the minimum and maximum range values for the output just specified, and a fail-safe signal for the output. See “Analog 1 and Analog 2” on page 56 for an explanation of how to configure these parameters.

— NOTE —

1. The **Failsafe (HART)** parameter does not have a **Pulse** selection.
2. To configure your HART digital communication parameters, see “HART Digital” on page 62.

HART Digital Outputs

The analyzer can have an optional communication module that allow measurement, status, and configuration information to be exchanged between the analyzer and the connected host. HART is one of these modules.

There are four HART measurements:

HART Measurement	875 Configuration Parameter
Primary Variable (PV)	Analog 1
Secondary Variable (SV)	HART Analog
Tertiary Variable (TV)	HART TV
Fourth Variable (FV)	HART FV

HART PV (Analog 1)

The primary variable (PV) is the measurement configured for Analog 1. Analog 1 can be configured to represent one of the following measurements: **Measurement**, **Temperature**, or **Absolute** (if **Cell Mode** = **Single** or **Redundant**); **Measurement 1**, **Temperature 1**, **Absolute 1**, **Measurement 2**, **Temperature 2**, **Absolute 2**, **% Rejection**, **Ratio**, **Meas Average**, or **Meas Difference** (if **Cell Mode** = **Dual**). It is frequently configured to **Measurement**, **Measurement 1**, or **Measurement 2**. You can also specify **Off** if you are not using this output.

HART SV (HART Analog)

The secondary variable (SV) is the measurement configured for HART Analog. Hart Analog can be configured to represent one of the following measurements: **Measurement**, **Temperature**, or **Absolute** (if **Cell Mode** = **Single** or **Redundant**); **Measurement 1**, **Temperature 1**, **Absolute 1**, **Measurement 2**, **Temperature 2**, **Absolute 2**, **% Rejection**, **Ratio**, **Meas Average**, or **Meas Difference** (if **Cell Mode** = **Dual**). It is frequently configured to **Temperature**, **Temperature 1**, or **Temperature 2**. You can also specify **Off** if you are not using this output.

HART TV

The tertiary variable (TV) can be configured to represent one of the following measurements: **Measurement**, **Temperature**, or **Absolute** (if **Cell Mode** = **Single** or **Redundant**); **Measurement 1**, **Temperature 1**, **Absolute 1**, **Measurement 2**, **Temperature 2**, **Absolute 2**, **% Rejection**, **Ratio**, **Meas Average**, or **Meas Difference** (if **Cell Mode** = **Dual**). It is frequently configured to **Absolute**, **Absolute 1**, or **Absolute 2**. You can also specify **Off** if you are not using this output.

HART FV

The fourth variable (FV) can be configured to represent one of the following measurements: **Measurement**, **Temperature**, or **Absolute** (if **Cell Mode** = **Single** or **Redundant**); **Measurement 1**, **Temperature 1**, **Absolute 1**, **Measurement 2**, **Temperature 2**,

Absolute 2, **% Rejection**, **Ratio**, **Meas Average**, or **Meas Difference** (if **Cell Mode** = **Dual**). You can also specify **Off** if you are not using this output. It is usually configured to **Off**.

Alarm 1, Alarm 2

Refer to Figure A-10 on page 88.

The analyzer has two sets of alarm contacts. Each is configured independently. On power-up and after configuration changes, alarm action is inhibited until the analyzer has stabilized and has passed the first damping factor. The alarm output may not be in the desired state until that time.

Measurement/Calculation/Condition

For each alarm (**Alarm n**), specify the alarm to one of the following measurements, calculations, or conditions: **Measurement**, **Temperature**, **Absolute**, or **On Fault** (if **Cell Mode** = **Single** or **Redundant**); **Measurement 1**, **Temperature 1**, **Absolute 1**, **Measurement 2**, **Temperature 2**, **Absolute 2**, **% Rejection**, **Ratio**, **Meas Average**, **Meas Difference**, **Temp Difference**, or **On Fault** (if **Cell Mode** = **Dual**). You can also specify **Off** if you are not using the alarm.

Alarm Activation

Next, specify in **Trip n** if you want the alarm to be:

- **Trip Low**: Active (energize relay) on a low going condition
- **Trip High**: Active (energize relay) on a high going condition

Specify the trip point (**Set Point n**) value. This is in the units previously configured and within the scale previously specified. Then specify **Control n** as **Hysteresis** or **Timed**. Both are used to minimize chatter around the setpoint. **Hysteresis** does this by using the measurement; **Timed**, by using time. If **Control n** is specified as **Hysteresis**, enter the hysteresis value. If you choose not to use either hysteresis or timed control, select **Hysteresis** and set the hysteresis value to zero.

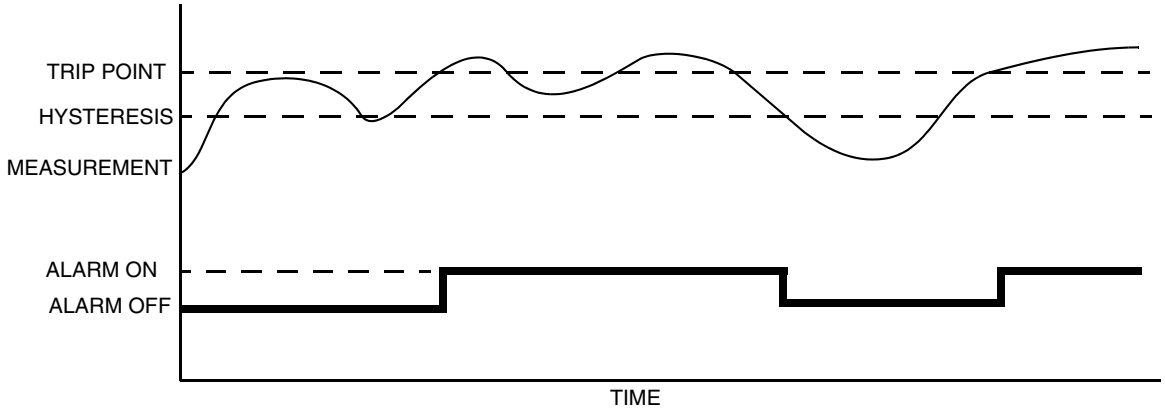

Figure 38. High Alarm with Hysteresis

If **Control** is specified as **Timed**, three timers are involved in the alarm:

- A **Trig Time n** (trigger time) wherein the condition must exist continuously for at least this time period before the alarm condition is met
- An alarm **On Time n** (feed time)
- An alarm **Off Time n** (delay time) before the alarm can trigger again.

The values can be set from 00.00 to 99.99 minutes.

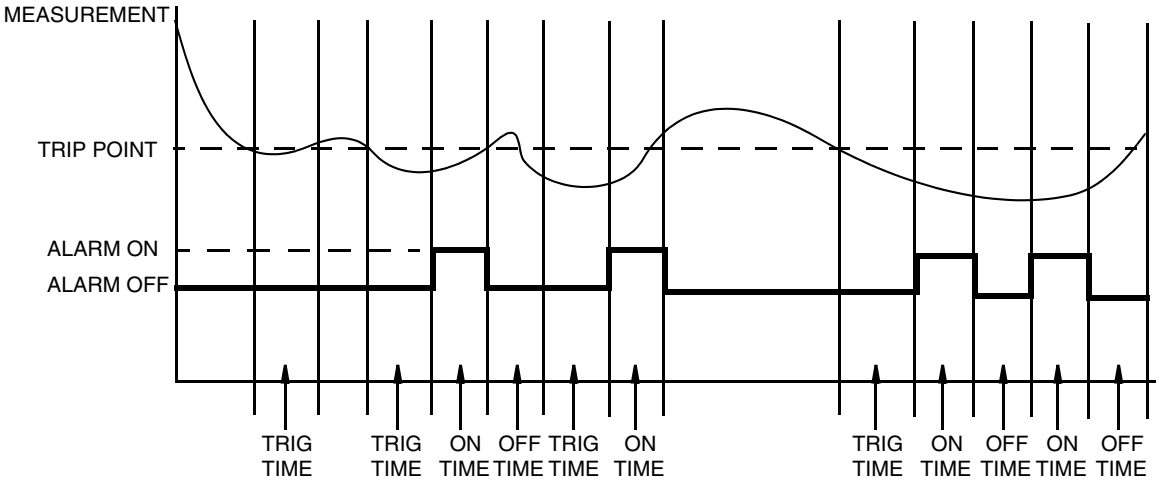

Figure 39. Timed Low Alarm

If you are logged on at Passcode Level 1, you are asked to specify the alarm fault action. If you are not logged on at Passcode Level 1, the structure advances you to the next parameter, **Trip State**. Set **Alm Fault Act** as **Meas Value**, **Meas and Fault**, or **Valid Meas**.

Meas Value enables an alarm only when the measurement exceeds the alarm setpoint.

Meas and Fault enables an alarm when the measurement exceeds the setpoint and/or if one of the selected faults are present. You can select the **Faults** that you want to activate the alarm. The choices are **All Faults**, **Analyzer Faults**, **Comm Faults**, **Leakage**, **ATC Short**, **ATC Open**, **4-20 Range**, **Comp Range**, and **Meas Range**. Choices are selected or deselected by presenting a choice on the display and pressing the **Enter** key. The selected choices appear on the menu preceded by a check mark (√). When you have finished making your selections, choose **Exit**.

Valid Meas validates the cause when the measurement exceeds the setpoint. If the cause is a fault and not process related, the alarm is disabled.

Lastly, specify the **Trip State** as **Energized** or **Deenergized**. In an alarm condition, **Energized** provides a contact closure between 1C and 1NO (2C and 2NO) and an open contact between 1C and 1NC (2C and 2NC); **Deenergized** provides a contact closure between 1C and 1NC (2C and 2NC) and an open contact between 1C and 1NO (2C and 2NO). To provide alarm capability on loss of power, select **Deenergized**.

— NOTE

The way you configure the alarm trip state must be done in conjunction with the way you wire the external device to the analyzer. See “Alarm Wiring” on page 19.

Run App

(Refer to Figure A-11 on page 89.)

NOTE

1. This parameter appears only if the number of applications set in **Number of Apps** was greater than 1.
2. Each application must have been previously configured. Activating a nonconfigured application has no effect.

If, in using the analyzer, you wish to change from one application to another, you can specify the application number as **1**, **2**, or **3** in **Run Application**. The entire application switches to that preconfigured application.

You can also specify **Auto** instead of an application number, and the analyzer switches from one application to another when triggered by measurements above or below established limits.

- When the measurement value exceeds the **App 1 Hi** preset, **App 2** runs.
- When the value then exceeds the **App 2 Hi** preset, **App 3** runs.
- When the value decreases below the **App 3 Lo** preset, **App 2** runs.
- When the value decreases below the **App 2 Lo** preset, **App 1** runs.

If you specify **Auto**, you must establish the presets which trigger movement from one application to another. Therefore, specify the values of **App 1 Hi**, **App 2 Lo**, **App 2 Hi**, and **App 3 Lo**. These values must be entered in actual values and not in percent. It is assumed that although the ranges of the applications must overlap, application 1 has the lowest conductivity value, application 2 is next, and application 3 has the highest. The switching from one application to another only takes a few seconds. However, once a switch is made, another switch is not allowed for one minute.

Lastly, the analyzer can be configured to change applications from an external device connected to the analyzer signal inputs. When one of the three application switching inputs DI 1, DI2, or DI3 changes state, the corresponding application 1, 2, or 3 is activated. When first configured, operation starts with the lowest configured application. To use this feature, set **Run Application** to **Signal.** Then, set the active state **Level** as **Direct** or **Inverted**. If **Direct**, the application becomes active when the input switch closes. If **Inverted**, it becomes active when the input switch opens.

Remote

Refer to Figure A-12 on page 89.

The analyzer can be operated via a remote personal computer program on a PC operating on Windows 95, Windows 98, Windows NT, or Windows 2000. To enable this capability, several parameters must be configured in this section of the structure.

Begin by setting **Configure Remote**, to **Port Settings**. Then, set the **Baud Rate** to **300**, **600**, **1200**, **2400**, **4800**, **9600**, or **19200**. Then set **Data Parity** to **7 Odd**, **7 Even**, **8 Odd**, **8 Even**, or **8 None** and **Stop Bits** to **1** or **2**.

Next, go back and set **Configure Remote** to **Update Rate**. Set the **Update** frequency as every **5**, **10**, **30**, **60**, **120**, **300**, **600**, **1200**, or **3600** seconds. You can also set this parameter to **Off**. The analyzer updates the remote port with measurement information at the configured update rate.

Lastly, set **Format** to **Printer** or **Spreadsheet**. This is used when your analyzer's RS232 serial port is connected to a remote printer having RS232 input or a PC with a dumb terminal program (for example, Hyperterminal) to produce a log of your measurements.

The standard printer format is difficult to use in a spreadsheet. Therefore, the firmware in the 875CR Analyzer has an additional configuration parameter to select the report format for a **Printer** or **Spreadsheet**. For more detailed information, see "Remote Data Logging" on page 68.

HART Digital

Refer to Figure A-13 on page 89.

This section of the structure enables you to specify your HART digital communication parameters. First, specify the **Poll Address** of 0 to 15. Then, specify the **Preambles** value of 5 to 255.

— NOTE

To configure your HART analog output, see "HART Analog" on page 57.
To configure your HART digital output, see "HART Digital Outputs" on page 58.

Cal Parameters

Refer to Figure A-14 on page 90.

Measurement and Temperature Stability

When performing a calibration (see "Calibration Mode" on page 35), the analyzer checks for stability in absolute measurement (**Meas Stability**) and temperature (**Temp Stability**) before accepting a change. This section enables you to configure the time (**Stability Time**) allowed to attain stability and the amount of fluctuation (**Stability Var**) allowed during the calibration. The value of **Stability Var** corresponds to the least significant digit of the measurement in the **Scale** you configured on page 46. Both **Stability Time** and **Stability Var** are configured individually in **Meas Stability** and **Temp Stability**.

First, configure **Meas Stability** as **On** or **Off**. If you configure this as **On**, you need to specify the **Stability Time** between 5 and 60 seconds (in 5-second increments) and the **Stability Var** between 1 and 9. A longer time period and a smaller measurement value assures more stability during calibration.

— NOTE

In specifying the **Stability Var**, the numbers 1 through 9 refer to the last digit of the primary scale; for example,

If scale is 20.00 mS, a **Stability Var** value of 5 means 0.05 mS
If scale is 100.0 µS, a **Stability Var** value of 5 means 0.5 µS.

Thus, if the Scale is 20.00 mS, and a stability time of 5 and allowed fluctuation of 9 are used, the values can change at a rate of 0.09 mS over 5 seconds.

Then repeat the procedure for **Temp Stability**. If you configure this as **On**, you need to specify the **Stability Time** between 5 and 60 seconds (in 5-second increments) and the **Stability Var** between 1 and 9 (°C or °F).

Calibration Deviation

The calibration deviation (**Cal Deviation**) parameter allows you to specify the amount of deviation from the factory calibration you can tolerate during your instrument calibration. You can specify **1%**, **2%**, **5%**, **10%**, or **20%**, or disengage this feature by specifying **Off**.

Local ac Power

If your analyzer was ordered to use 24 V dc supply voltage, you must specify **Local ac Power** as 50 or 60 Hz in order to best filter the readings. This can be done from the front panel display or the PC-Based configurator. It cannot be done from a HART Communicator.

Automatic Hold

Refer to Figure A-15 on page 90.

This parameter enables to configure your analyzer to go into a Hold state whenever you are in Calibration or Configuration mode without setting the Hold each time. It also automatically removes the Hold when you leave Calibration or Configuration mode. To configure this parameter, specify **Automatic Hold** as **Present** to hold all values and states at their current level, **Manual** to set all values and states at the levels specified in Hold mode, or **Off**, if you choose not to use this feature.

Diags

Refer to Figure A-16 on page 90.

This section of the structure allows you to configure fault messages that can appear on your display. You can elect to enable or disable **All Diags** messages, or enable or disable each of the following individually: **Leakage**, **ATC Short**, **ATC Open**, **4 - 20 Range**, **Comp Range**, and **Meas Range**. Each of these is discussed below. A typical approach is to initially disable **All Diags** messages and to enable selected messages later when you find out that you require them.

Choices are selected or deselected by presenting a choice on the display and pressing the **Enter** key. The selected choices appear on the menu preceded by a check mark (√). When you have finished making your selections, choose **Exit**.

Diagnostics that are enabled and triggered can also force a fail-safe analog output signal, if desired. See “Analog 1 and Analog 2” on page 56.

Leakage

This message reports a problem of severe liquid leakage into the sensor which causes an ATC short to a measurement electrode. The message can be enabled or disabled. A **Cell Fault** message is displayed if this diagnostic is enabled and this fault occurs.

— NOTE

Disable this diagnostic if you are using an 871CC sensor.

ATC Short, ATC Open

This message reports a problem if the resistance of the temperature compensator is greater or less than the expected resistance of the device configured. The message for each can be enabled or disabled. A **Cell Fault** message is displayed if this diagnostic is enabled and this fault occurs.

4 - 20 Range

This message reports that the measurement tied to the analog output (measurement, absolute measurement, or temperature) is outside the range configured for the currently running application. The message can be enabled or disabled. A **Configuration Fault** message is displayed if this diagnostic is enabled and this fault occurs.

Comp Range

This message reports that the measured temperature or absolute conductivity or resistivity measurement is outside the temperature or chemical compensation curve configured for the currently running application. The message can be enabled or disabled. A **Configuration Fault** message is displayed if this diagnostic is enabled and this fault occurs.

Meas Range

This message reports that the measurement is over or under the measurable range that is configured for the currently running application. The message can be enabled or disabled. A **Configuration Fault** message is displayed if this diagnostic is enabled and this fault occurs.

Timeouts

Refer to Figure A-17 on page 91.

This section of the structure asks you to specify the time in which the instrument brings you back to the Measure mode from another on-line mode (Status, Diagnostics, or Configuration) when no keyboard input has occurred. In Measure mode, **Timeouts** also limits the time to view a secondary display other than that configured in “Display” on page 54. The timeout can be configured separately for front panel (**Front Panel Timeout**), remote (**Remote Timeout**), and digital communication (**Dig Comm Timeout**) operation. The time can be specified between 5 and 999 seconds.

Date and Time

Refer to Figure A-18 on page 91.

The analyzer contains a real-time clock device that maintains the correct time and date even with loss of power.

To configure this parameter, enter the **Date** in the form MM/DD/YYYY and the **Time** as HH:MM. The time is on the basis of 24 hours.

Analyzer Names

Refer to Figure A-19 on page 91.

This section of the structure asks you to identify your analyzer. You can specify its Tag Number, Tag Name, Location, and Device Name. Each can be up to the following number of characters in length:

Tag Num	12 characters
Tag Name	16 characters
Location	14 characters
Device Name	8 characters

These identifications then appear in Status mode.

Passcodes

Refer to Figure A-20 on page 91.

Analyzer security is provided by the use of passcodes. This is described in detail in "Passcode Access" on page 24. The passcodes for the three levels of security can be established in this parameter. Enter the passcode for **Level 1**, **Level 2**, and **Level 3**. Each can be from 0000 to 9999.

Adjust LCD

Refer to Figure A-21 on page 91.

You can adjust the brightness on your display. Do this, in this section of the structure, by changing the **LCD Adjust** number using the **Up** and **Down** arrow keys. The numbers (-9 to 0 to +9) shown on the display should only be used as an indication of where you are in the range of adjustment. Use the **Up** arrow key to darken the display and the **Down** arrow key to lighten it. When the display brightness is pleasing to your taste, press **Enter**.

Factory Defaults

Refer to Figure A-22 on page 91.

At the display **Config to Defaults**, you can leave the parameters as presently set by selecting **Exit to Primary**. Alternatively, you can reset your configuration back to the factory default settings by selecting **Load Defaults**. The factory default settings are shown in bold print in Appendix B. If you do the latter, you are asked **Are You Sure?** Respond with the **Yes** or **No** key.

⚠ CAUTION

Loading factory defaults permanently removes your present configuration.

Diagnostic Mode

The Diagnostic mode enables you to:

- View pending faults and temporarily suspend those faults
- Resume any suspended faults
- View the diagnostic history log
- Send the history log to a remote port
- Erase the history log.

To enter the Diagnostic mode, press the **Mode** key until the **Diag** indicator is illuminated. Press **Enter**. Use the **Mode** key to exit Diagnostic mode and go to Measure mode. If there are no key presses within the configured Timeout period, the analyzer reverts to Measure mode and the outputs remain on hold.

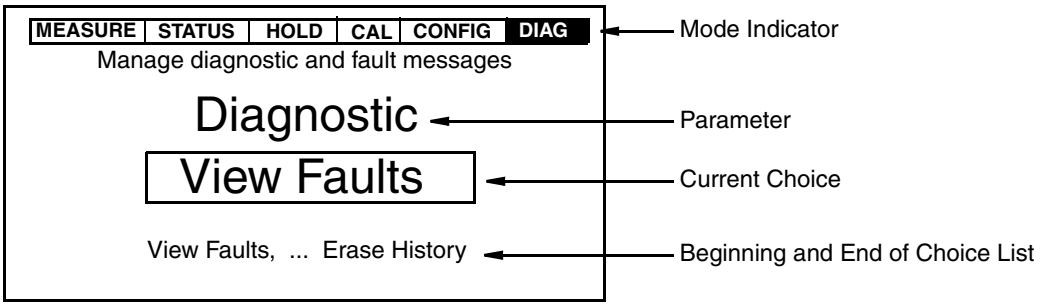

Figure 40. Sample Diagnostic Screen

Figure 41 shows the top-level Diagnostic mode structure diagram.

Select **View Faults** to view and possibly suspend each fault. Use the **Up** and **Down** (or **Right**) arrow keys to view other faults. If there are no faults, the display reads **No Faults**. Press the **Enter** key to suspend a displayed fault. The display asks for your passcode. An incorrect passcode returns you to the start of the Diagnostic menu. A correct passcode causes the prompt **Suspend Fault?** to be displayed. If you answer **Yes**, the message **XXXXX Suspended** is displayed where **XXXXX** is the name of the fault that was displayed. After either a **Yes** or **No** reply, the next fault is shown. When all faults have been suspended or if there are no faults, the message **No Faults** appears. Each suspended fault is inhibited from reoccurring for one hour from the time the Diagnostic mode is entered.

Select **View History** and use the arrow keys to view the diagnostic history.

Select **Demand Report** to send the history log out to a remote port. To do this, connect the RS-232 port on your analyzer to your printer or a serial port on your computer. If you are downloading the report to a computer, use the Hyperterminal accessory. Make sure the port settings on your computer match those on your analyzer. See “Remote” on page 61.

If you are downloading the report to a printer, the printer must be a “serial port” printer and have continuous paper feed. If you do not have this type of printer, you can download the report to a computer and then print it.

Select **Erase History** to erase the history log. This function is passcode protected. If you are not already in Level 1, the display asks for the Level 1 passcode. An incorrect passcode returns you to

the start of the Diagnostic menu. A correct passcode causes the message **History Erased** to appear.

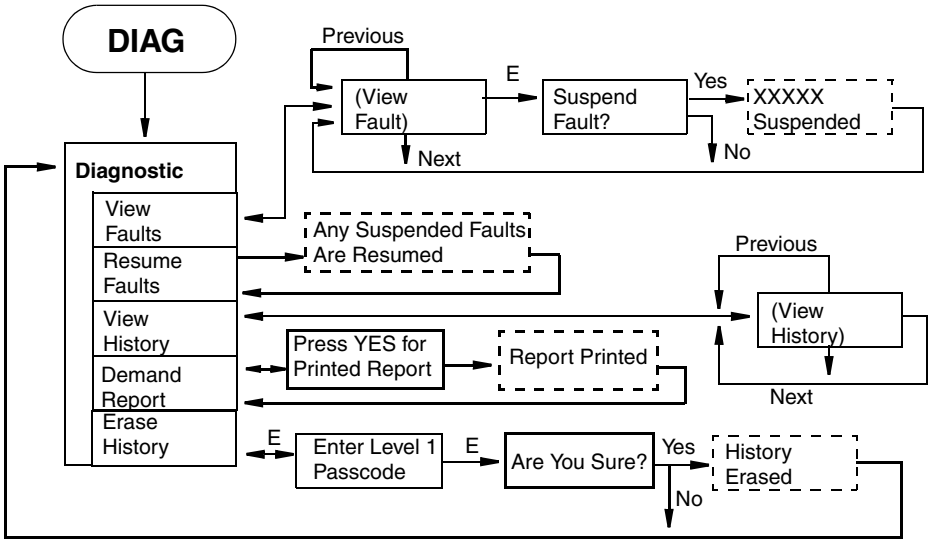

Figure 41. Top Level Diagnostic Mode Structure

Calibration Validation

To verify that your instrument is operating properly, you can substitute fixed resistors for the sensor input and view absolute value of the simulated measurement in conductivity units.

NOTE

1. This is a verification procedure, not a calibration procedure. To perform a calibration, see "Calibration Mode" on page 35.
2. Resistance values must be known within 0.01%. Therefore include resistance of leads used.

The calculation of the value of the resistor required depends on the cell factor and the units of conductivity or resistivity.

R = (Cell Factor) (10^6)/conductivity in µS/cm

R = (Cell Factor) (10^3)/conductivity in mS/cm

R = (Cell Factor) (10^5)/conductivity in mS/m

R = (Cell Factor) (10^2)/conductivity in S/m

R = (Cell Factor) (resistivity in MΩ•cm)

R = (Cell Factor) (resistivity in kΩ•cm)

The verification procedure is as follows:

1. Remote power from the analyzer.
2. Disconnect the sensor from terminals 1 and 2.
3. Connect the resistor across terminals 1 and 2.

— NOTE

When substituting a resistor for an 871CC Sensor, do **not** disconnect the jumpers across terminals 2A and 4 on your analyzer.

4. Apply power and allow the analyzer to stabilize.
5. Using the Up and Down arrow keys, scroll the display to show absolute measurement. It should agree with the calculated value.

Remote Data Logging

The 875 Analyzer is designed to allow its RS232 serial port to be connected to a remote printer having RS232 input. All fundamental measurements are reported to the RS232 port in a printable format at periodic intervals. The exact interval is selected in the Configuration Mode (see "Remote" on page 61). The first report is made immediately after power up, any calibration, or any configuration change. Thereafter the update rate is used.

Connection between the 875 Analyzer and the printer is made with a 3 m (10 ft) Serial Cable BS809WH, which has a connector at one end for plugging into the 875 Analyzer RS232 port and a standard DB9 connector at the other end that is suitable for plugging directly into a PC port. Different printers have different connectors and any adaptors or null modems required between the DB9 and the printer must be supplied by the user. The 875 Analyzer remote settings must be configured to match the printer's RS232 settings (for example, baud rate).

— NOTE

Because the **UNCERTAINTY** and **MV STATUS** fields in the printout are not implemented at this time, they show an output of **?**.

You can similarly use a PC and dumb terminal program (for example, Hyperterminal) to produce an electronic log of 875 Analyzer measurements. As with the printer, the above mentioned serial cable is required and the RS232 settings in the terminal program must match those in the 875 Analyzer Remote configuration. Once the 875 Analyzer measurements start appearing in the dumb terminal window, simply use the program's log-to-file function to record them in the PC.

The standard format recorded in this way is difficult to use in a spreadsheet. Therefore, the firmware in the 875CR Analyzer has an additional configuration parameter to select the report format for a **Printer** or **Spreadsheet** (See Figure A-12). The spreadsheet option produces a single line per update with all values separated by commas to generate a Comma Separated Variable (.CSV) format recognized by most spreadsheets. It is recommended that such a log file be created with a .CSV extension. This format is difficult to read unless it is imported into a spreadsheet program. The columns are:

Tag
Date,
Time,
Hold State,
Fault Severity (0=OK, 1=warning, 2=soft, 3=hard),
Active Probe,
Active Measurement,
Measurement Units,
Active Temperature,

Temperature Units,
Active Absolute Measurement,
Absolute Units,
Measurement 2,*
Measurement Units,*
Temperature 2,*
Temperature Units,*
Absolute 2,*
Absolute Units,*
*Included only if Configuration Cell Mode = Dual

Once a set of .CSV updates is imported into a spreadsheet, it is easy to make trend plots or other calculations.

6. Operation Via HART Communicator

Description

The 875 Series Analyzers with HART communications may be configured, operated, and calibrated using the HART Communicator.

The HART Communicator is used in two environments: Offline (not connected to an analyzer) and Online (connected to an analyzer). The Main menu (shown in Figure 42) is displayed when not connected to an analyzer. The Online Menu (shown in Figure 43) is displayed when connected to an analyzer.

Overview of Top Level Menus

Figure 42 shows the Main menu structure of the HART Communicator. Figure 43 shows the top level Online menu for the 875 Series Analyzers.

1. Offline	Compile a set of configuration data for downloading to an analyzer or simulate an online connection to an analyzer without connecting to it.
2. Online	Configure, calibrate, or operate an online analyzer.
4. Frequency Device	Display the frequency output and pressure output of current to pressure devices.
5. Utility	Configure communicator parameters such as auto polling and adjusting contrast of communicator LCD. Also access to HART communicator simulation

Figure 42. HART Communicator Main Menu

1 Measure	Display the measurement (process variable) and related data.
2 Status	Display the measurement and system parameters
3 Hold	Hold the output at a determined value
4 Calibrate	Perform calibration functions.
5 Config	Perform configuration functions
6 Diag	Perform diagnostic functions
7 Logon Passcode	Enter the passcode

Figure 43. 875 Series Analyzers Top Level Online Menu

Connecting the Communicator to the Analyzer

Connect the HART communicator to the COM1(+) and COM2(-) terminals of the analyzer that are shown in Figures 8 and 9 or any other convenient place in the loop. Therefore, if you are configuring the analyzer on the bench (no loop load) with a HART communicator, you must add a 250 Ω resistor.

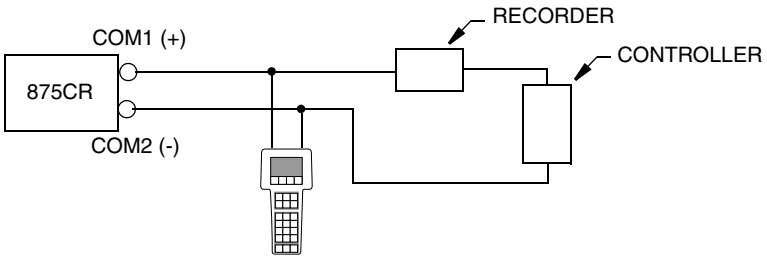

Figure 44. HART Communicator Connection

Communicator Keyboard and Display

Refer to the HART user manual supplied with the communicator.

Offline Configuration

The offline configuration feature is not available at this time.

Online Configuration

Online Flowchart

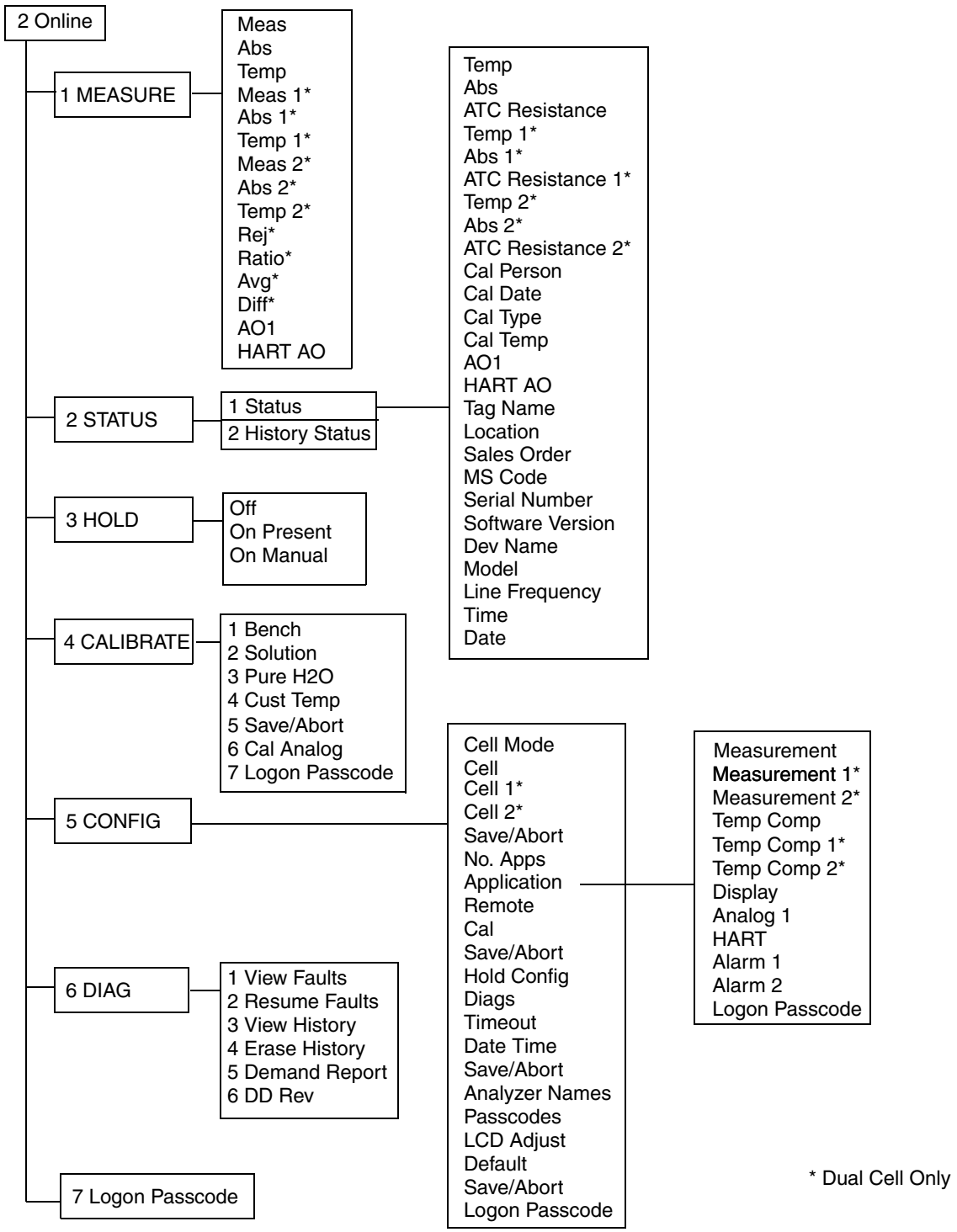

Figure 45. Online Configuration Flowchart

Online Modes

Measurement

To display the measurement on the communicator, select **1 Measure** from the Online menu. The display will show:

Meas*	The measurement value in engineering units.
Abs*	The uncompensated measurement in millivolts.
Temp*	The temperature measurement in engineering units.
Rej	The percent rejection if dual cell.
Ratio	The measurement ratio if dual cell.
Avg	The average measurement of the two cells if dual cell.
Diff	The measurement difference of the two cells if dual cell.
A01	Analog Output 1 (PV) in mA.
HART AO	HART Analog Output (SV) in mA.

*For both Cell 1 and Cell 2 if dual cell.

You can then select what you wish to display.

Status

To display the status on the communicator, select **2 Status** from the Online menu. You can then select to view the Current Status or the History Status and view the status of a number of parameters.

Hold

To access the Hold functions from the communicator, select **3 Hold** from the Online menu. Access requires you to have previously entered the proper passcode. You can then select **Off** to not use the Hold function, **Present** to hold all values and states at their current value, and **Manual** to set values and states at desired levels. In **Manual**, the Hold function does not take effect until all the values are entered.

Calibrate

To access the Calibration functions from the communicator, select **4 Calibrate** from the Online menu. Access requires you to enter the proper passcode. You can then select **Bench**, **Solution**, **Pure H2O**, **Cust Temp**, or **Cal Analog** calibration. If you select **Cal Analog**, you must further define the output as **AO1** or **HART**.

NOTE

If **Save/Abort** appears in the Calibration menu, there are configuration changes pending. **Save/Abort** must be selected before any calibration is allowed.

Configure

To access the Configuration functions from the communicator, select **5 Config** from the Online menu. Access requires you to enter the proper passcode. You can then configure a number of parameters from the menu that is presented.

— NOTE

Before leaving the Configure mode, you must activate **Save/Abort** if it is visible.

Diagnostics

To access the Diagnostic functions from the communicator, select **6 Diag** from the Online menu. You can then select **View Faults**, **Resume Faults**, **View History**, **Erase History**, **Demand Report**, or **DD Rev**. The proper passcode is required to suspend a fault or to erase the history log.

— NOTE

The DD Rev may not change with upgrade to subsequent firmware versions.

Logon Passcode

To access certain functions from the HART Communicator, you must enter the Level 1, Level 2, or Level 3 passcode (that was configured into the analyzer) into the HART Configurator. To do this, select **7 Logon Passcode** from the Online menu.

— NOTE

7 Logon Passcode can also be used to ‘lock’ the analyzer by entering an invalid passcode.

Explanation of Parameters

Parameter	Explanation
Measure Mode	
Abs	Displays the absolute (uncompensated) measurement
AO1 [(a)]	Displays the Analog Output 1 (PV) measurement in mA or volts
Avg	Displays the average measurement of (cell 1 + cell 2) / 2
Diff	Displays the measurement difference For conductivity, cell 1 - cell 2 For resistivity, cell 2 - cell 1
HART AO [(a)]	Displays the HART Analog Output (SV) measurement in mA
Meas	Displays the measurement in specified engineering units
Ratio	Displays the measurement ratio For conductivity, (cell 2 / cell 1) x 100 For resistivity, (cell 1 / cell 2) x 100
Rej	Displays the percent rejection For conductivity, [1- (cell 2 / cell 1)] x 100 For resistivity, [1- (cell 1 / cell 2)] x 100
Temp	Displays the process temperature measurement in specified engineering units
Status Mode [(b)]	
Abs	Displays the absolute measurement
AO1	Displays the value of Analog Output 1 (PV) in mA or volts
ATC Resistance	Displays the resistance of the temperature compensator
Cal Date	Displays the date of the last calibration in the form mm/dd/yy
Cal Person	Displays the name of the last calibrator
Cal Temp	Displays the temperature calibration type of last calibration (default, custom, solution, failsafe, manual)
Cal Type	Displays the type of the last calibration (bench, solution, factory default)
Date	Displays the current date
Dev Name	Displays the device name of the analyzer
HART AO	Displays the HART analog output (SV) in mA
History Status	Displays up to 10 of the most current history log entries (if present)
Line Frequency	Displays the ac line frequency of the analyzer
Location	Displays the location of the measurement
Model	Displays the model number of the analyzer
MS Code	Displays the analyzer model code
Sales Order	Displays the analyzer sales order number
Serial Number	Displays the analyzer serial number
Software Version	Displays the software version of the analyzer

Parameter	Explanation
Status	Displays the current status of the analyzer
Tag Name	Displays the tag name of the analyzer
Temp	Displays the process temperature of the sensor
Time	Displays the current time
Hold Mode	
Off	Used to release the analyzer from Hold state
On Manual	Used to hold all values and states at desired levels
On Present	Used to hold all values and states at their current level
Calibrate Mode [c]	
Bench	Used to perform a calibration using theoretical inputs or to return to the stored factory default calibration
Cal Analog	Used to tune the 4 mA and 20 mA values of the AO1 or HART analog outputs
Logon Passcode	Used to enter the passcode to access Calibration mode
Pure H2O	Used to perform a pure water calibration.
Solution[d]	Used to perform a calibration using real solutions
Config Mode	
Alarms	Used to specify each alarm to represent measurement, temperature, absolute, or a fault and then subparameters associated with each
Analog 1	Used to specify the Analog 1 output (PV) to represent measurement, temperature, or absolute; minimum (LRV) and maximum (URV) range values; and failsafe output
Analyzer Names [e]	Used to specify the tag number, tag name, location, and device name
Application	Used to specify the measurement, display, temperature compensation, output, and alarm configuration for each application.
Cal	Used to specify the options to be used with a solution calibration
Cell	Used to specify the cell constant and temperature features for all three applications
Cell Mode	Used to specify cell mode as Single, Dual, or Redundant
Datetime	Used to set the date and time for the real time clock
Default	Used to reset the configuration back to the factory default values
Diags	Used to specify what fault messages can appear on your display
Display	Used to configure the display as single, dual, or scan and then subparameters associated with each
HART	Used to specify the HART outputs (SV, TV, FV) to represent measurement, temperature, or absolute; minimum (LRV) and maximum (URV) range values; and failsafe output. Also used to specify the Polling Address and the Preambles value.

Parameter	Explanation
Hold Config	Used to configure all values and states to be held at their current level (On Present) or at a desired level (On Manual) when triggered by a digital signal or when going into Calibration or Configuration mode
LED Adjust	Used to adjust the brightness of the front panel display
Logon Passcode	Used to enter the passcode to access Configuration mode
Measurement	Used to configure units, damping, and other measurement parameters
No. Apps	Used to specify the number of applications you wish to preconfigure.
Passcodes	Used to establish or change the Level 1, 2, and 3 passcodes
Remote	Used to configure parameters associated with a remote personal computer or RS232 printer
Run Apps	Used to switch form one application to another
Temp Comp	Used to configure the temperature compensation for the chemical being measured
Timeouts	Used to specify the time for front panel, remote, and digital communication timeouts
Diag Mode	
DD Rev	Used to display the DD version
Demand Report	Used to send the history log out to the remote RS232 port
Erase History	Used to erase the history log (requires Level 1 passcode)
Logon Passcode	Used to enter the passcode to perform functions requiring a passcode
Logon Passcode Mode	
Resume Faults	Used to resume any suspended faults
View Faults	Used to view any faults and possibly suspend each fault
View History	Used to view the diagnostic history

(a) If configured **Off**, display reads **NaN.**

(b) At message “Ignore next 50 occurrences of status?”, reply “YES”.

(c) If a disconnect occurs during calibration, recycle power or attempt another calibration.

(d) IPS recommends that you do not use Solution Calibration for a[pplications with MΩ•cm measurement units.

(e) Use a maximum of eight upper case letters for Tag Number.

7. Maintenance

WARNING

This product contains components that have critical safety characteristics. Do **not** substitute components. Replace components only with identical factory supplied components. Component substitution may impair the electrical safety of this equipment and its suitability for use in hazardous locations.

CAUTION

Your analyzer uses printed wiring assemblies with MOS devices that are highly susceptible to damage from electrostatic discharge. Relatively low static potential can rupture MOS devices resulting in shorted gate or degraded device characteristics. It is recommended that assemblies with MOS devices be handled with the user earthed (grounded) by wearing a conductive wrist strap or by standing on an ESD mat.

The maintenance of the 875CR Analyzer is limited to the replacement of the display assembly and printed wiring assemblies. See PL 611-158 (Style A and B) or PL 611-163 (Style C) for part numbers. Attempts by the user to repair printed wiring assemblies could result in damage and voiding of the warranty. The recommended repair procedure is replacement of the PWAs or return of the PWAs to the factory for repair.

Appendix A. Structure Diagrams

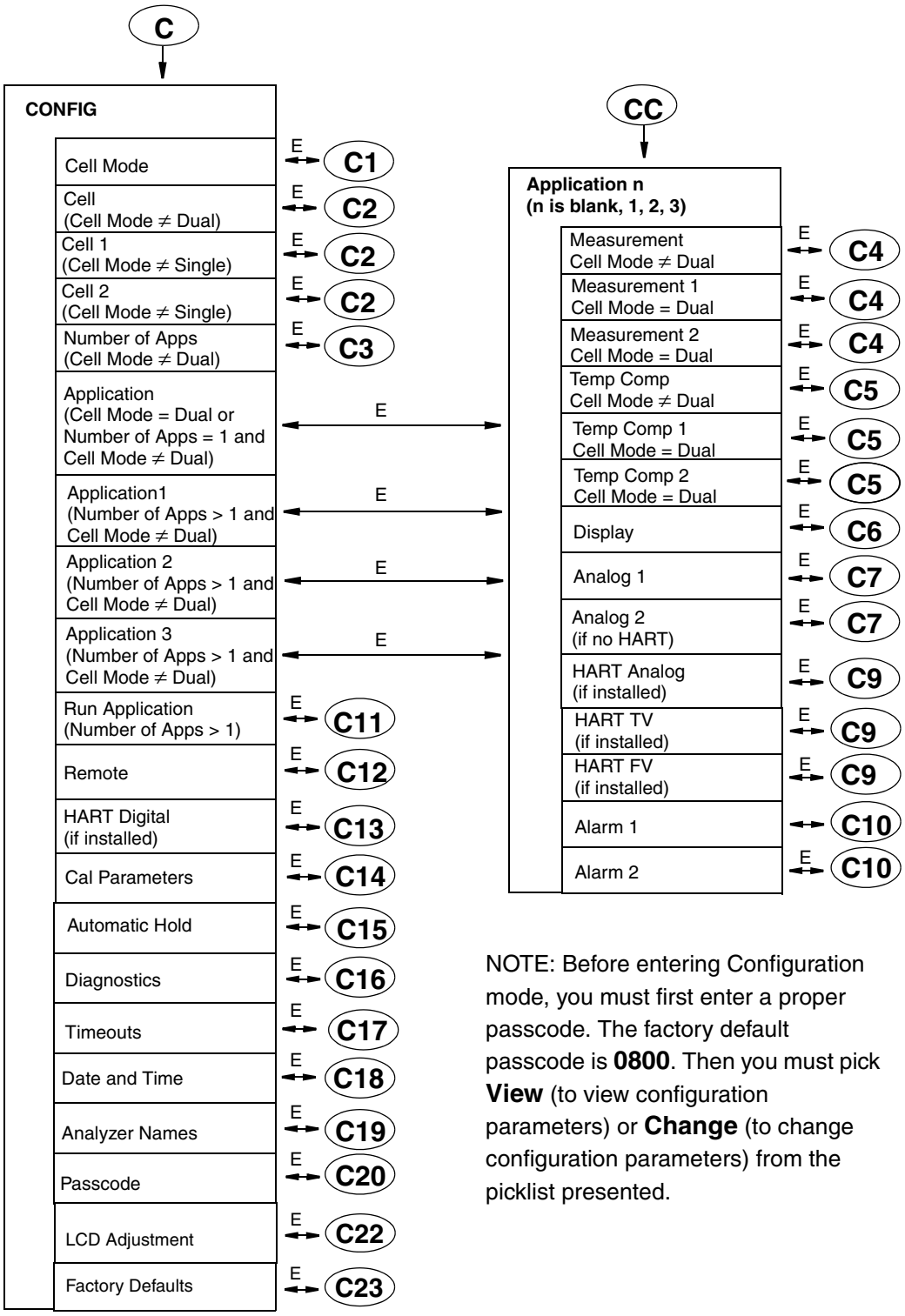

NOTE: Before entering Configuration mode, you must first enter a proper passcode. The factory default passcode is **0800**. Then you must pick **View** (to view configuration parameters) or **Change** (to change configuration parameters) from the picklist presented.

Figure A-1. Configuration Top Level Structure Diagram

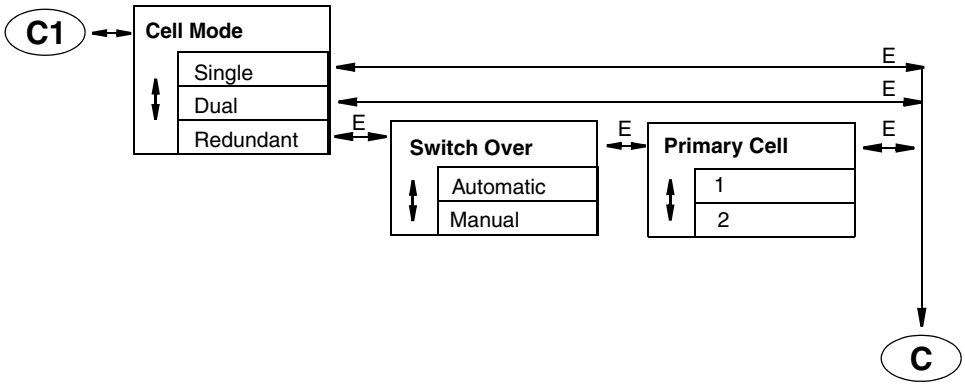

Figure A-2. Configure Cell Mode Structure Diagram

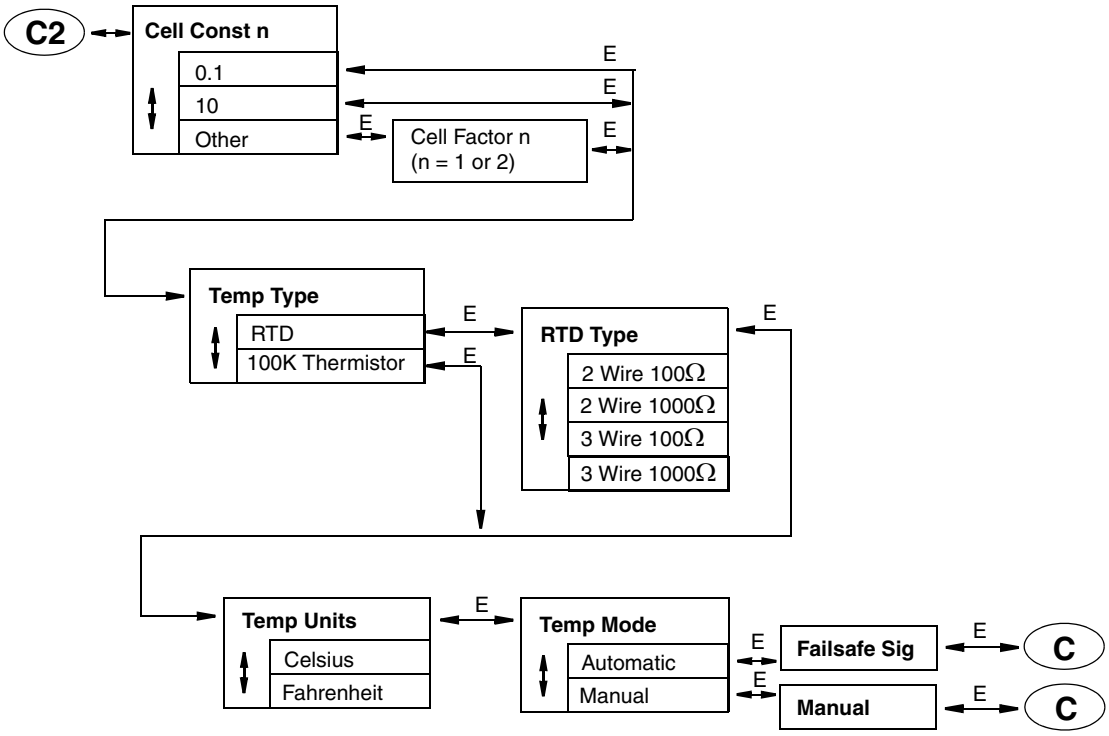

Figure A-3. Configure Cell Structure Diagram

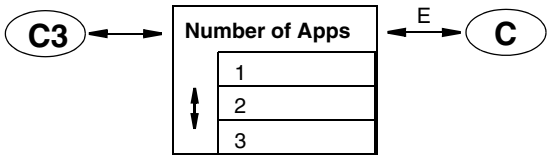

Figure A-4. Configure Applications Structure Diagram

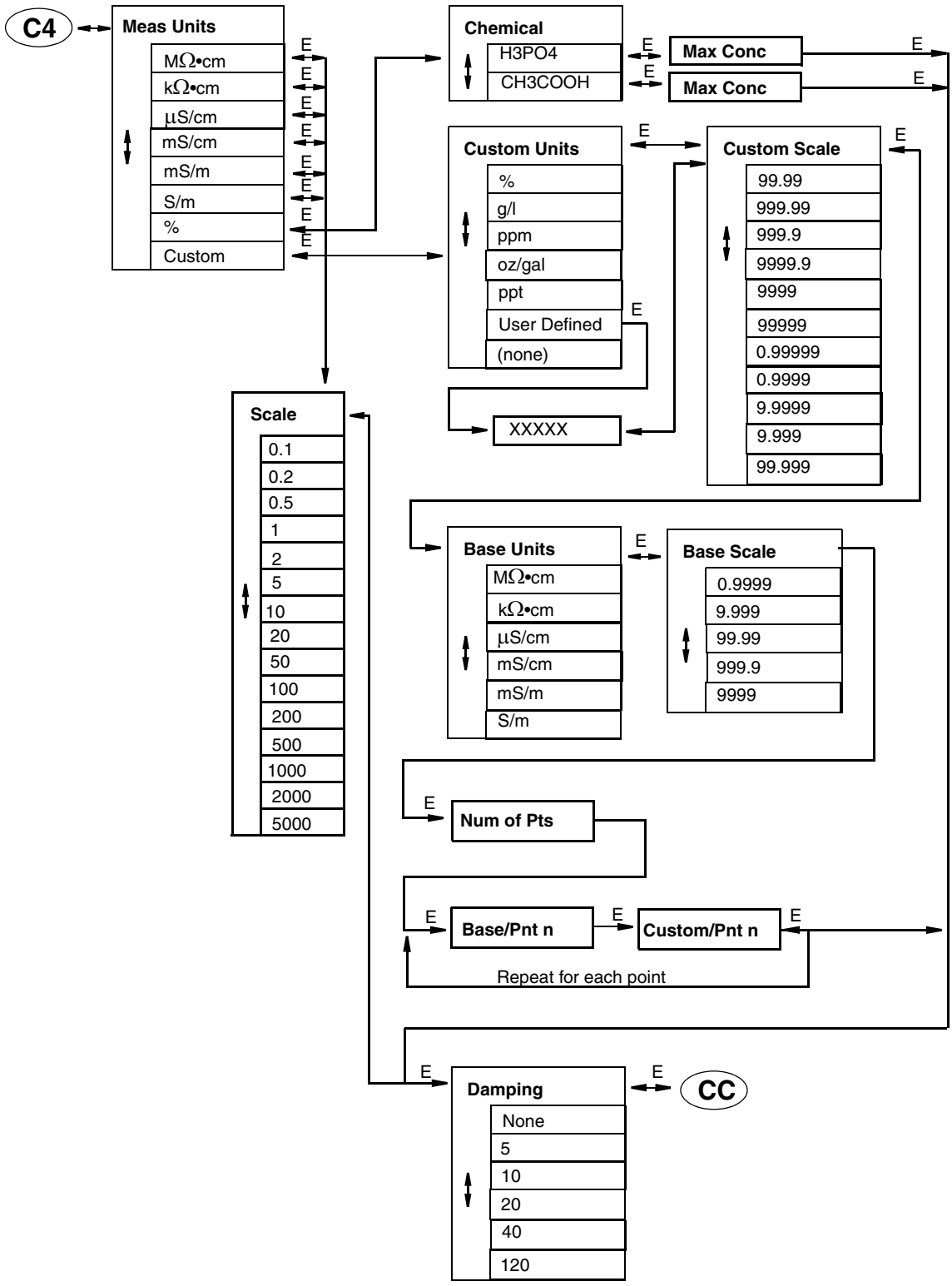

Figure A-5. Configure Measurement Structure Diagram

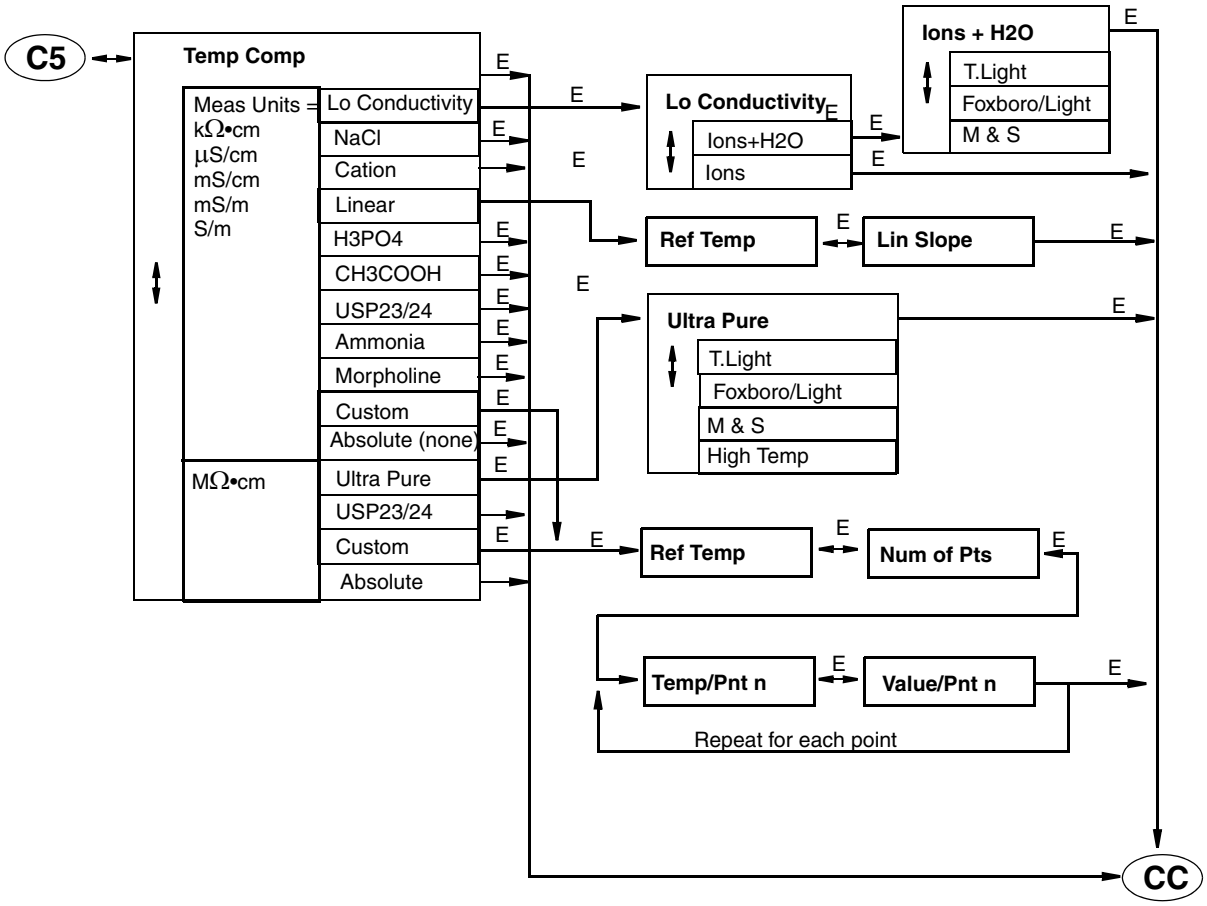

Figure A-6. Configure Tempcomp Structure Diagram

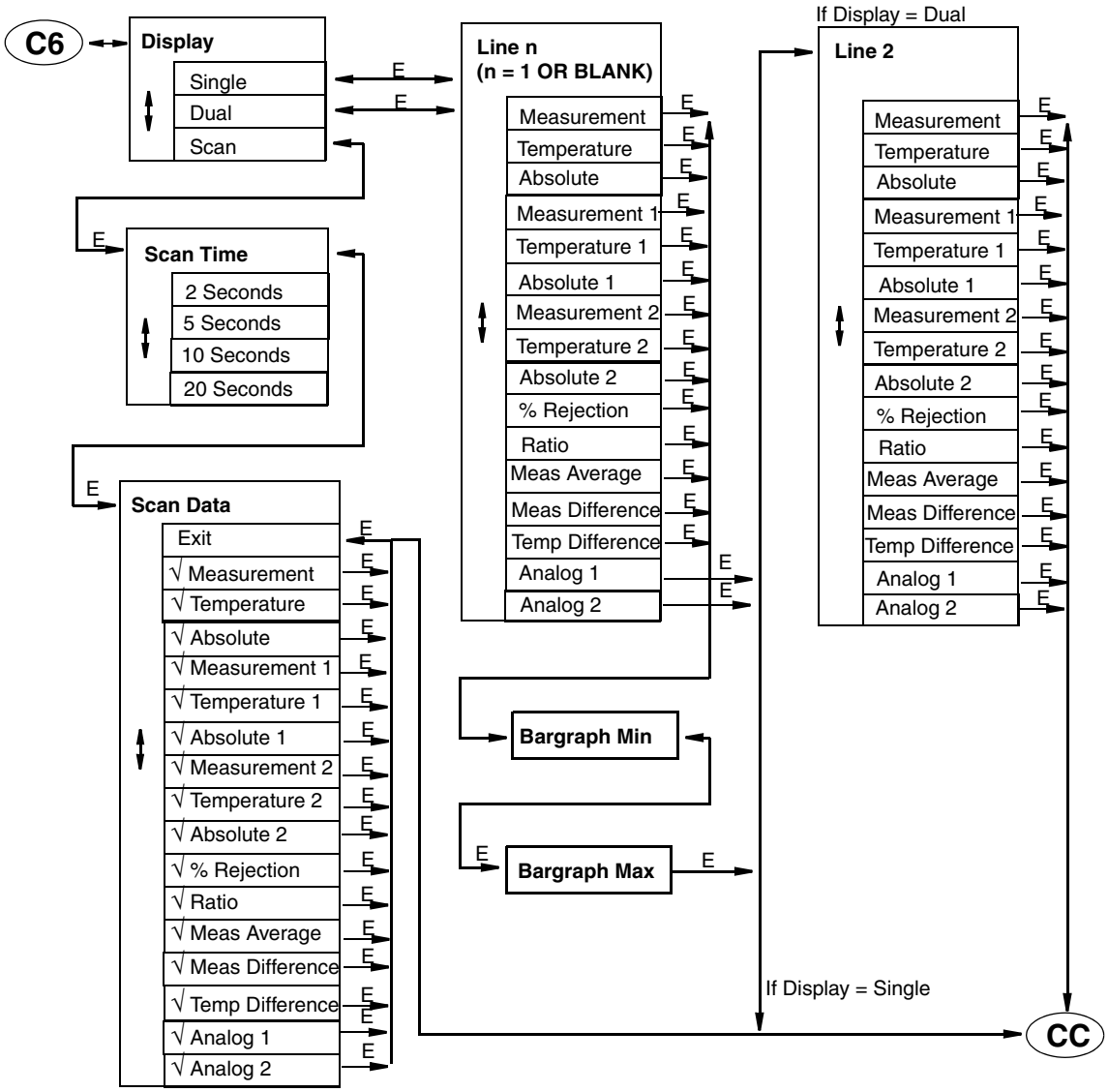

Choices selected have preceding "√".

Pressing **Enter** toggles choice as selected or not selected.

Figure A-7. Configure Display Structure Diagram

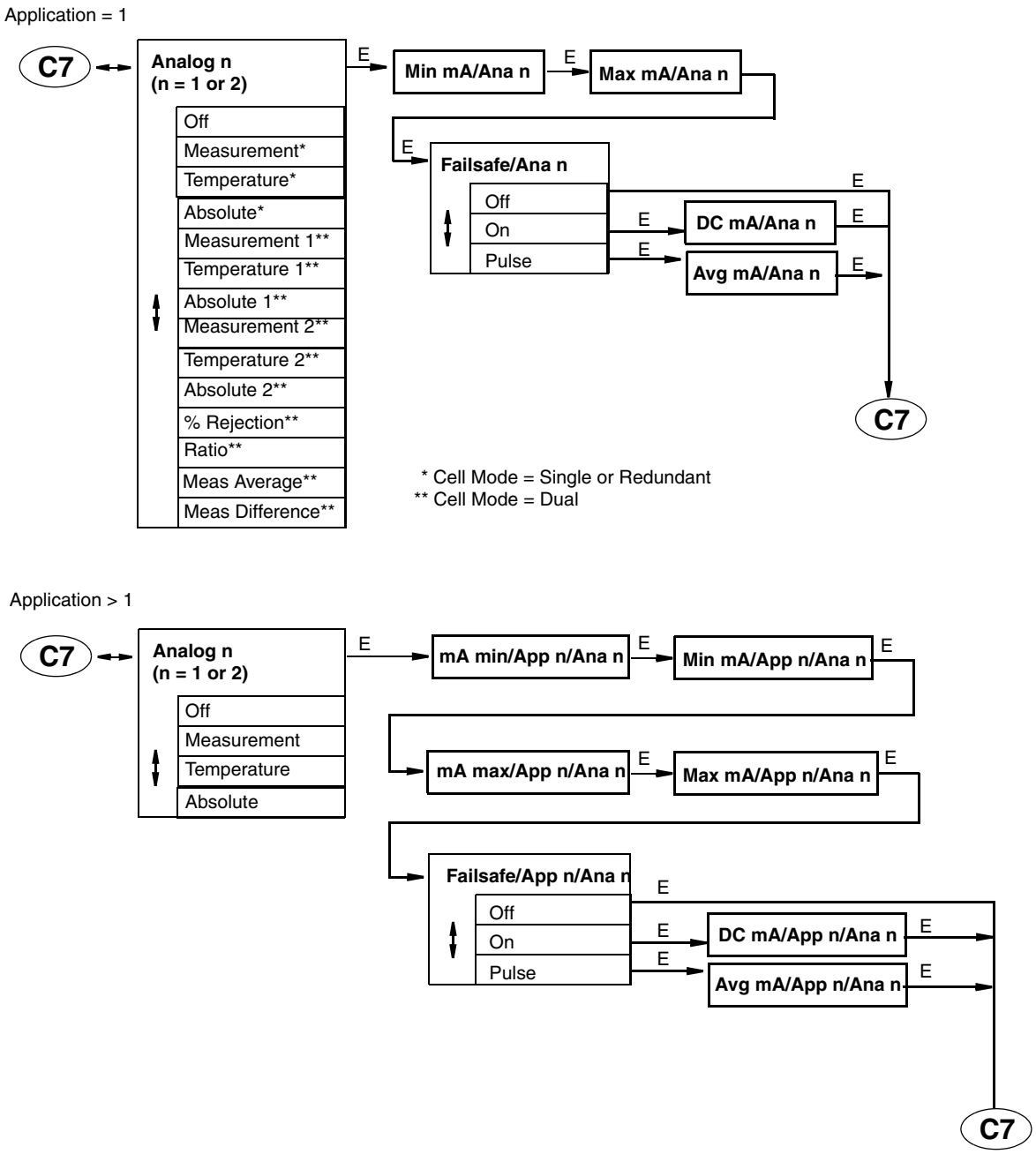

Figure A-8. Configure Analog Structure Diagram

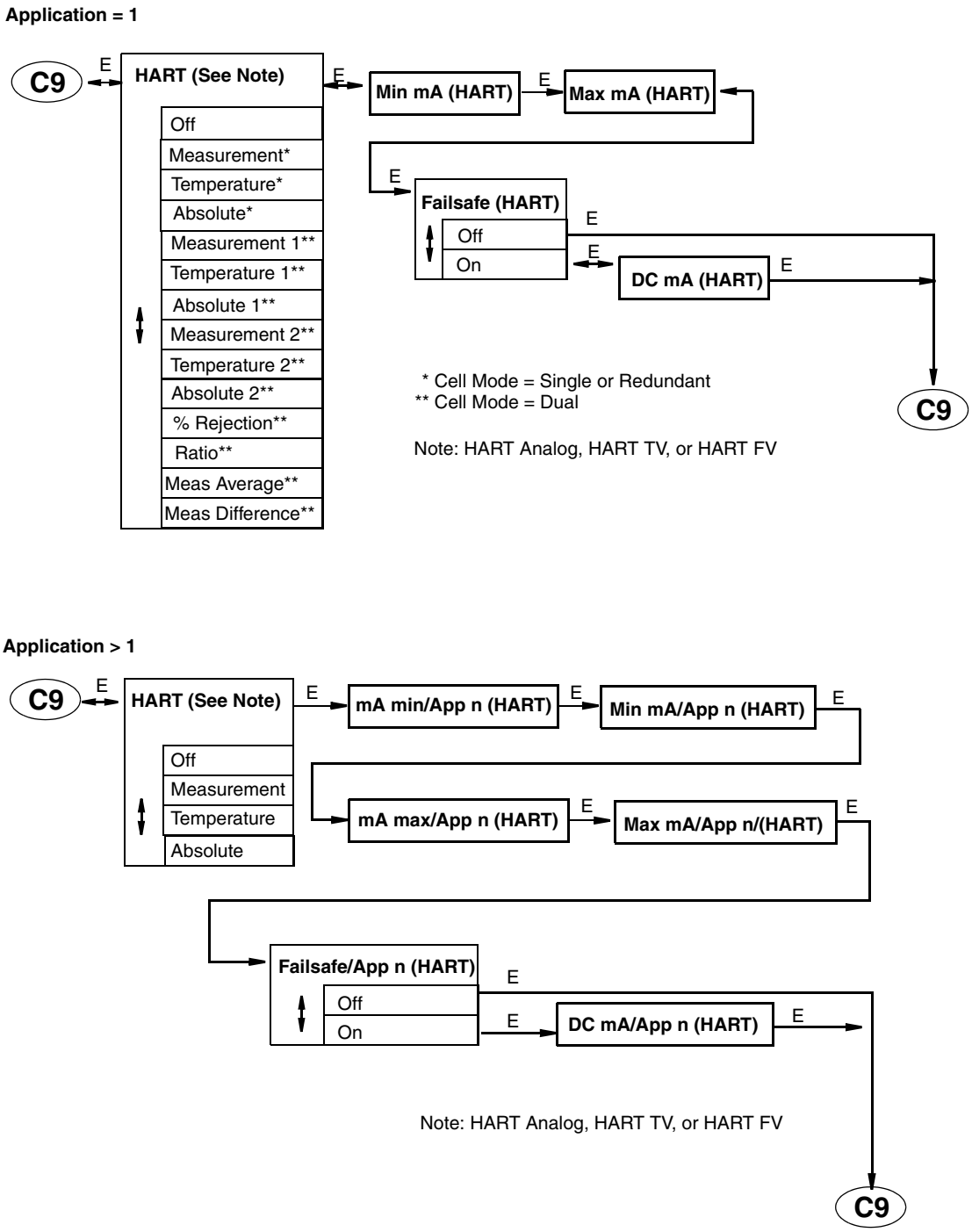

Figure A-9. Configure HART Analog, HART TV, or HART FV Structure Diagram

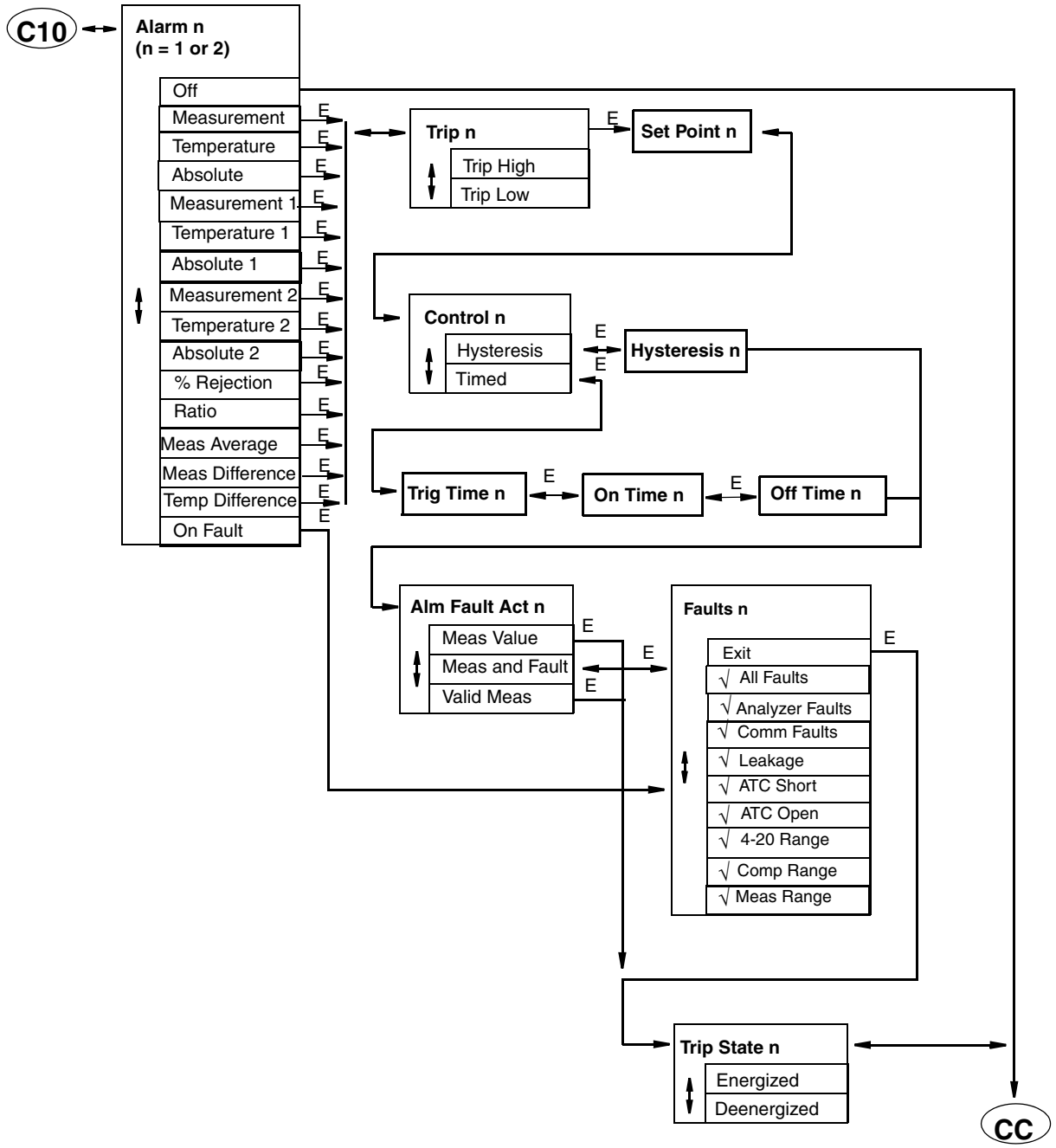

Figure A-10. Configure Alarm Structure Diagram

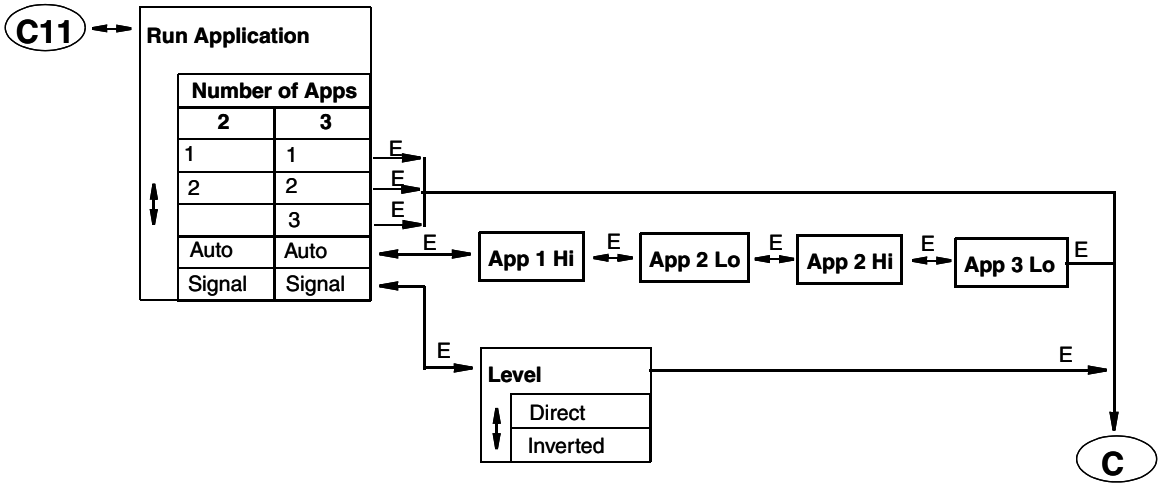

Figure A-11. Configure Run Application Structure Diagram

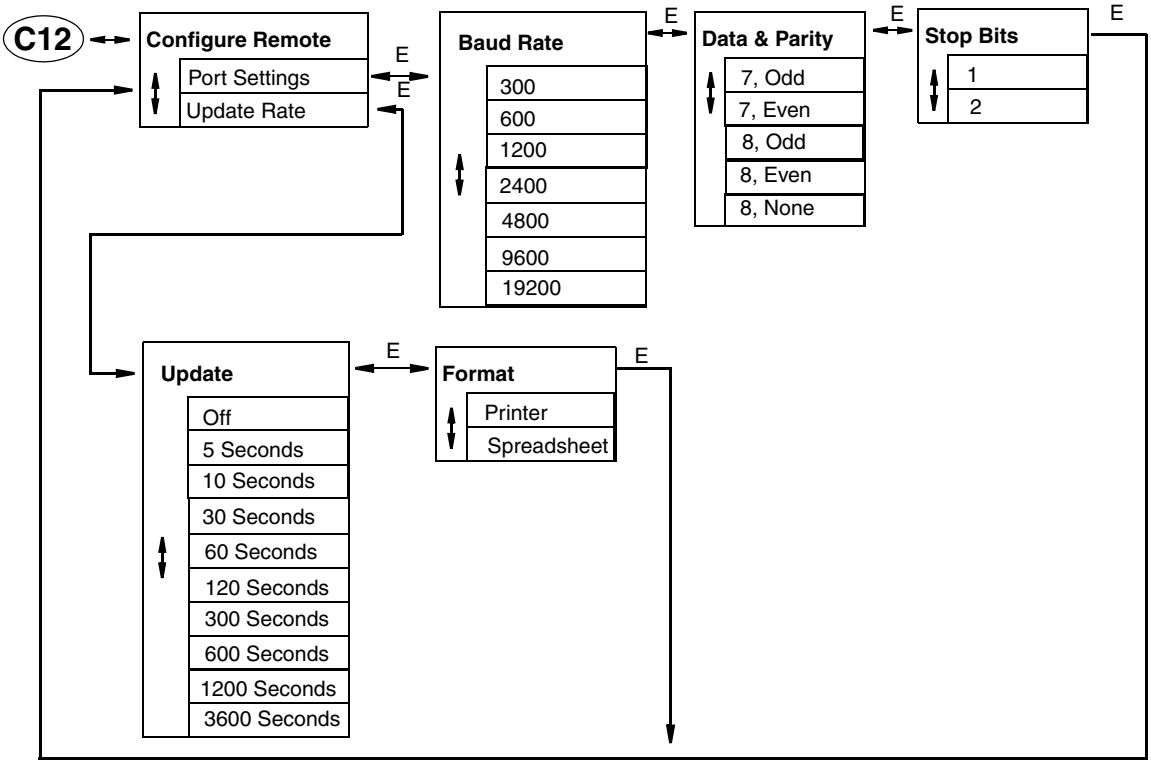

Figure A-12. Configure Remote Structure Diagram

Figure A-13. Configure HART Digital Structure Diagram

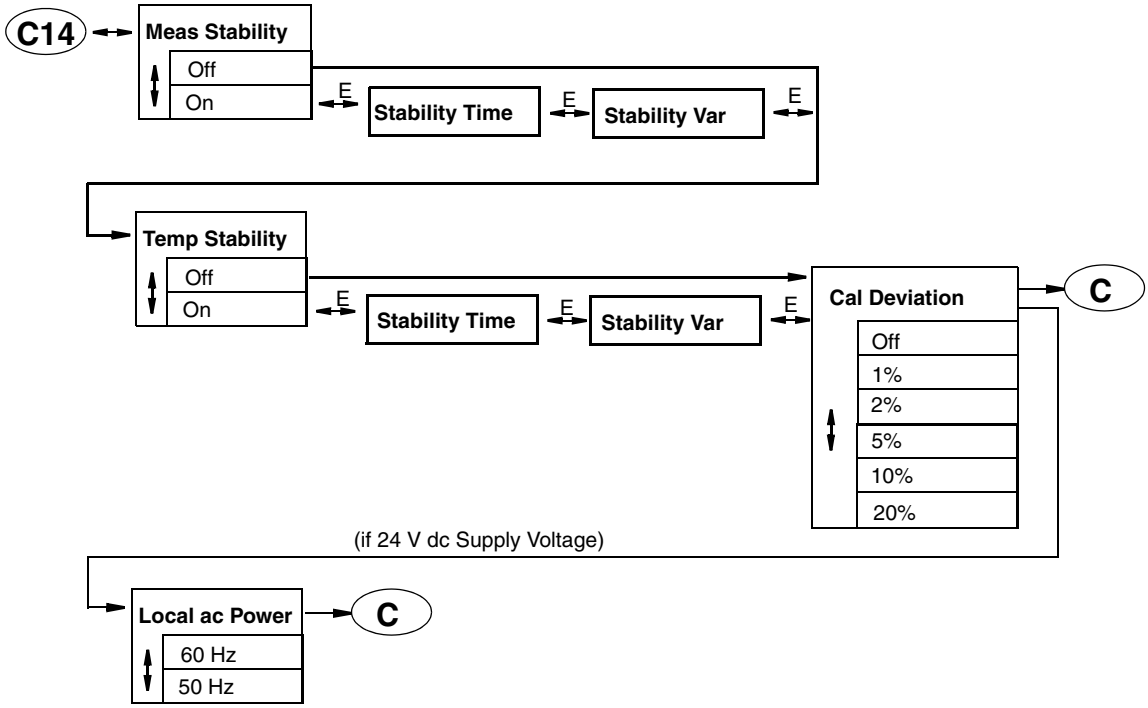

Figure A-14. Configure Calibration Parameters Structure Diagram

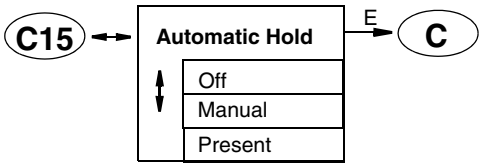

Figure A-15. Configure Automatic Hold Structure Diagram

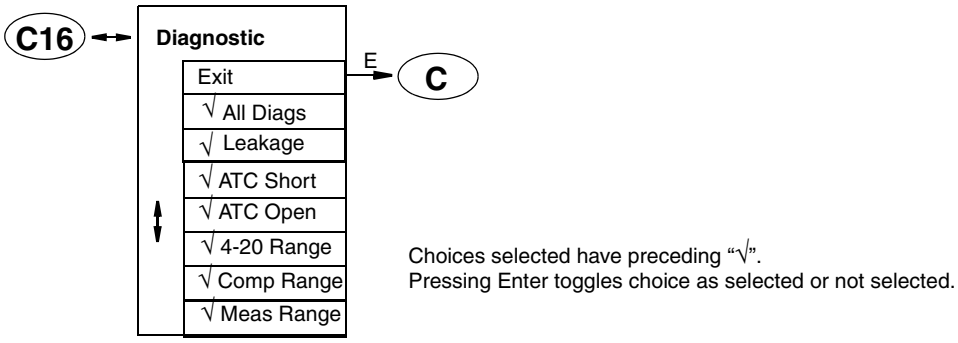

Figure A-16. Configure Diagnostic Structure Diagram

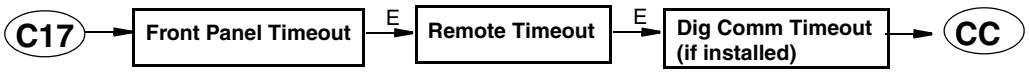

Figure A-17. Configure Timeouts Structure Diagram

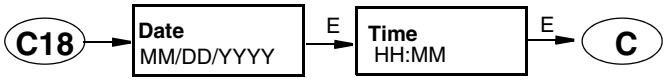

Figure A-18. Configure Date and Time Structure Diagram

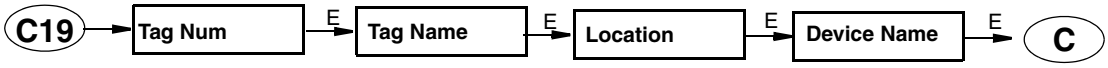

Figure A-19. Configure Analyzer Names Structure Diagram

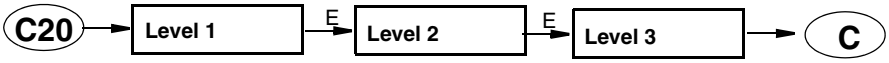

Figure A-20. Configure Passcode Structure Diagram

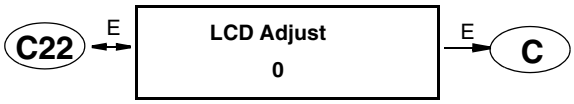

Figure A-21. Configure LCD Adjustment Structure Diagram

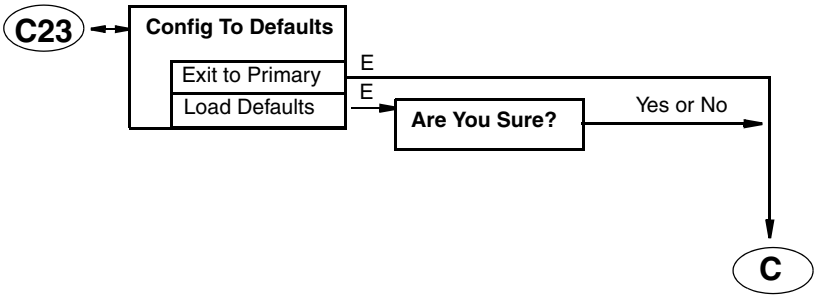

Figure A-22. Configure Factory Defaults Structure Diagram

Appendix B. Configuration Table

This appendix contains information that helps you configure your analyzer. The information is presented in the form of a table containing each prompt/parameter, its limits, and its factory configuration value. It also provides space for you to record your specific configuration and notations.

NOTE

Bold print in the Factory Configuration column indicates the configuration resulting from the Configure Factory Defaults menu.

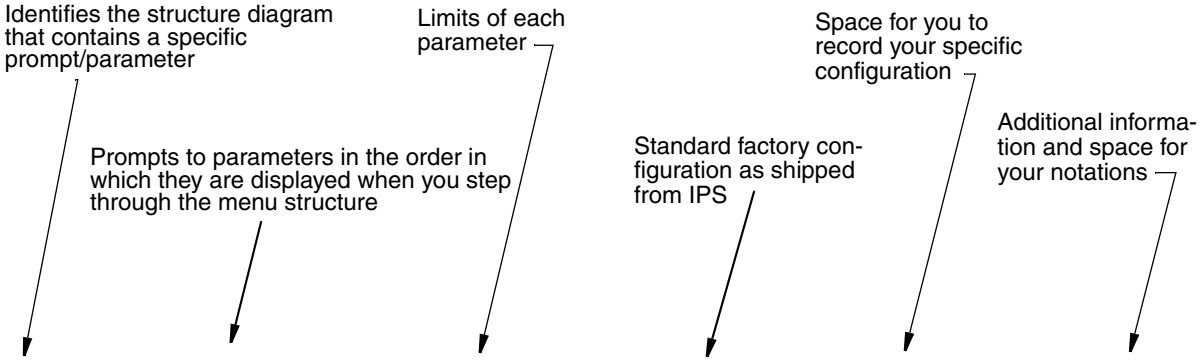

Figure	Prompt/Parameter	Parameter Limits	Factory Configuration	User Configuration	Remarks and Notes
A-1	Config	Cell Mode Cell Cell 1, Cell 2 Number of Apps Application Application1 Application 2 Application 3 Run Application Remote HART Digital (if HART installed) Cal Parameters Automatic Hold Diagnostics Timeouts Date and Time Analyzer Names Passcode LCD Adjustment Factory Defaults	Cell Mode		

Figure	Prompt/Parameter	Parameter Limits	Factory Configuration	User Configuration	Remarks and Notes
A-2	Cell Mode	Single, Dual, Redundant	**Single**		
	Switch Over	Automatic, Manual	Automatic		Cell Mode = Redundant
	Primary Cell	1, 2	1		
A-3	Cell Const n	0.1, 10, Other	**0.1**		
	Cell Factor n	0.0095 to 99.9999 by 0.0001	0.1000		If Cell Const = Other
	Temp Type	RTD, 100K Thermistor	**RTD**		
	RTD Type	2 Wire 100 Ω, 2 Wire 1000 Ω, 3 Wire 100 Ω, 3 Wire 1000 Ω 2 Wire MIL 3 Wire MIL	**3 Wire 1000 Ω**		Temp Type = RTD
	Temp Units	Celsius, Fahrenheit	**Celsius**		
	Temp Mode	Automatic, Manual	**Automatic**		
	Failsafe Sig	-20 to +200 by 0.1°C -4 to +392 by 0.1°F	**25.0**		Temp Mode = Automatic
	Manual	-20 to +200 by 0.1°C -4 to +392 by 0.1°F	0.0		Temp Mode = Manual
A-4	Number of Apps	1, 2, 3	**1**		Mode ≠ Dual

Figure	Prompt/Parameter	Parameter Limits	Factory Configuration	User Configuration	Remarks and Notes
A-5	Meas Units	MΩ•cm, kΩ•cm, µS/cm, mS/cm, mS/m, S/m, %, Custom	**µS/cm**		
	Scale	Depends on sensor, cell const and units	**10**		If Meas Units not % or Custom
	Chemical	H3PO4, CH3COOH	H3PO4		If Meas Units = %
	Max Conc	0.1 to 3.0 by 0.1	3.0		If H3PO4
	Max Conc	0.1 to 9.0 by 0.1	1.0		If CH3COOH
	Custom Units	%, g/l, ppm, oz/gal, ppt, User Defined, (none)	%		If Meas Units = Custom
	Custom Scale	99.99, 999.99, 999.9, 9999.9, 9999, 99999, 0.99999, 0.9999, 9.9999, 9.999, 99.999	99.99		
	Base Units	MΩ•cm, kΩ•cm, µS/cm, mS/cm, mS/m, S/m	µS/cm		
	Base Scale	0.9999, 9.999, 99.99, 999.9, 9999	999.9		
	Num of Pts	2 to 21	2		
	Base/Pnt n	0 to 2000	0		
	Custom/Pnt n	0 to 2000	0		
	Damping	None, 5, 10, 20, 40, 120 Seconds	**None**		

Figure	Prompt/Parameter	Parameter Limits	Factory Configuration	User Configuration	Remarks and Notes
A-6	Temp Comp	Lo Conductivity, Cation, NaCl, Linear, H3PO4, CH3COOH, USP23/24, Ammonia, Morpholine, Custom, Absolute (none)	**Lo Conductivity**		If Meas units = kΩ•cm, µS/cm, mS/cm, mS/m, S/m
		Absolute, Ultrapure, USP23/24, Custom	Absolute		If Meas Units = MΩ•cm
	Lo Conductivity	Ions + H2O, Ions	**Ions + H2O**		
	Ions + H2O	T.Light, Foxboro/Light, M&S	**TLight**		If Lo Conductivity = Ions + H2O
	Lin Slope	0.5 to 5.0	0.5 %/°C		If Temp Comp = Linear
	Ultra Pure	T.Light, Foxboro/Light, M&S High Temp	T.Light		
	Ref Temp	-20 to +200 by 0.1°C -4 to +392 by 0.1°F	25.0		If Temp Comp = Custom
	Num of Pts	2 to 21	2		
	Temp/Pnt n	-20 to +200 by 0.1°C -4 to +392 by 0.1°F	0.0		
	Value/Pnt n	0.001 to 9.999	0.0		

Figure	Prompt/Parameter	Parameter Limits	Factory Configuration	User Configuration	Remarks and Notes
A-7	Display	Single, Dual, Scan	**Dual**		
	Scan Time	2, 5, 10, 20	2		If Display = Scan
	Scan Data	Exit, Measurement, Temperature, Absolute, Measurement 1, Temperature 1, Absolute 1, Measurement 2, Temperature 2, Absolute 2, % Rejection, Ratio, Meas Average, Temp Difference, Analog 1, Analog 2	Measurement, Measurement 1		If Display = Scan. Choices selected have preceding "√".
	Line, Line 1, or Line 2	Measurement, Temperature, Absolute, Measurement 1, Temperature 1, Absolute 1, Measurement 2, Temperature 2, Absolute 2, % Rejection, Ratio, Meas Average, Meas Difference, Temp Difference, Analog 1, Analog 2	**Line, Line 1 = Measurement; Line 2 = Temperature**		Line if Line Mode = Single or Redundant; Line 1 or Line 2 if Line Mode = Dual
	Bargraph Min	See Scale	**0.0**		If Line = Measurement, Temperature, or Absolute or Line 1 = Measurement 1, Temperature 1, Absolute 1, % Rejection, Ratio, Meas Average, Meas Difference, Temp Difference
	Bargraph Max	See Scale	**5.00**		

Figure	Prompt/Parameter	Parameter Limits	Factory Configuration	User Configuration	Remarks and Notes
A-8	Analog n	Off, Measurement, Temperature, Absolute, Measurement 1, Temperature 1, Absolute 1, Measurement 2, Temperature 2, Absolute 2, % Rejection, Ratio, Meas Average, Meas Difference	**Measurement**		
	Min mA/Ana n	See Scale	**0.00**		If Analog n ≠ Off
	Max mA/Ana n	See Scale	**5.00**		If Analog n ≠ Off
	Failsaf/Ana n	Off, On, Pulse	**Off**		
	DC mA/Ana n	3.8 to 20.5	20.5		If Failsafe = On
	Avg mA/Ana n	3.8 to 20.5	10		If Failsafe = Pulse
A-9	HART Analog	Measurement, Temperature, Absolute, Measurement 1, Temperature 1, Absolute 1, Measurement 2, Temperature 2, Absolute 2, % Rejection, Ratio, Meas Average, Meas Difference	Measurement, Measurement 1		If HART installed
	Min mA (HART)	See Scale	0		
	Max mA (HART)	See Scale	Full Scale		
	Failsafe (HART	Off, On	Off		
	DC mA (HART)	3.8 to 20.5	20.5		If Failsafe = On
A-9	HART TV	Same as for HART Analog	Off		If HART installed
A-9	HART FV	Same as for HART Analog	Off		If HART installed

Figure	Prompt/Parameter	Parameter Limits	Factory Configuration	User Configuration	Remarks and Notes
A-10	Alarm n	Off, Measurement, Temperature, Absolute, Measurement 1, Temperature 1, Absolute 1, Measurement 2, Temperature 2, Absolute 2, % Rejection, Ratio, Meas Average, Meas Difference, Temp Difference, On Fault	**Off**		
	Trip n	Trip High, Trip Low	Trip High		
	Set Point n	See Scale	5.00		
	Control n	Hysteresis, Timed	Hysteresis		
	Hysteresis	See Scale	0.000		If Control = Hysteresis
	Trig Time n	00.00 to 99.99	0.00		If Control = Timed Time in minutes
	On Time n	00.00 to 99.99	0.00		
	Off Time n	00.00 to 99.99	0.00		
	Alm Fault Act n	Meas Value, Meas and Fault, Valid Meas	Meas Value		Accessible by Level 1 Passcode only.
	Faults n	Exit, All Faults, Analyze Faults, Comm Faults, Leakage, ATC Short, ATC Open, 4-20 Range, Comp Range, Meas Range	All Faults		Choices selected have preceding "√".
	Tripped State	Energized, De-energized	De-energized		
A-11	Run Application	1, 2, Auto, Signal 1, 2, 3, Auto, Signal	1		If Num Apps = 2 If Num Apps = 3
	App 1 Hi	See Scale	5.000		
	App 2 Lo	See Scale	0.00		
	App2 Hi	See Scale	10.00		If Num Apps = 3
	App 3 Lo	See Scale	0.00		If Num Apps = 3
	Level	Direct, Inverted	Direct		If Run Application = Signal

Figure	Prompt/Parameter	Parameter Limits	Factory Configuration	User Configuration	Remarks and Notes
A-12	Configure Remote	Port Settings, Update Rate	- - -		
	Baud Rate	300, 600, 1200, 2400, 4800, 9600, 19200	**19200**		If Configure Remote = Port Settings
	Data & Parity	7 Odd, 7 Even, 8Odd, 8 Even, 8 None	**8 None**		
	Stop Bits	1, 2	**1**		
	Update	Off, 5, 10, 30, 60, 120, 300, 600, 1200, 3600	**600**		If Configure Remote = Update Rate
	Format	Printer, Spreadsheet			
A-13	HART Digital	- - -	- - -		If HART installed
	Poll Address	0 to 15	0		
	Preambles	5 to 255 by 1	5		
A-14	Cal Parameters	- - -	- - -		
	Meas Stability	Off, On	**Off**		
	Stability Time	5 to 60 by 5	5		If Meas Stabil;ity = On
	Stability Var	1 to 9 by 1	9		
	Temp Stability	Off, On	**Off**		
	Stability Time	5 to 60 by 5	5		If Temp Stability = On
	Stability Var	1 to 9 by 1	9		
	Cal Deviation	Off, 1%, 2%, 5%, 10%, 20%	**1%**		
	Local ac Power	50 or 60 Hz	**60 Hz**		For 24V dc power supply units only
A-15	Automatic Hold	Off, Manual, Present	**Manual**		
A-16	Diagnostic	Exit, All Diags, Leakage, ATC Short, ATC Open, 4-20 Range, Comp Range, Meas Range	**All Diags disabled**		Choices selected have preceding "√".
A-17	Timeouts	- - -	- - -		
	Front Panel Timeout	5 to 999	**600**		
	Remote Timeout	5 to 999	**600**		
	Dig Comm Timeout	5 to 999	600		If Dig Comm installed

Figure	Prompt/Parameter	Parameter Limits	Factory Configuration	User Configuration	Remarks and Notes
A-18	Date and Time	- - -	- - -		
	Date	Month: 1 to 12 Day: 1 to 31 Year: 1999 to 2098	**Real date**		
	Time	Hour: 1 to 23 Minute: 00 to 59	**Real time**		24 hour format
A-19	Analyzer Names	- - -	- - -		
	Tag Num	12 characters	(blank)		
	Tag Name	16 characters	(blank)		
	Location	14 characters	(blank)		
	Dev Name	8 characters	(blank)		
A-20	Passcode	- - -	- - -		
	Level 1	0000 to 9999	**0800**		
	Level 2	0000 to 9999	**0800**		
	Level 3	0000 to 9999	**0800**		
A-21	LCD Adjust	-9 to 0 to +9	**0**		
A-22	Config To Defaults	Exit to Primary, Load Defaults	**Exit to Primary**		

Index

B
Bench Calibration 39

C
Calibration Mode 35
Changing Data 26
Configuration 41
Configuration Mode 41
Configuration Structure Diagrams 81
Configuration Table 93
Controls and Indicators 21

D
Diagnostic Mode 66
Diagnostics 30
Display 22

F
Fault Messages 23

H
Hold Mode 33

I
Identification 11
Installation 11
Introduction 1

M
Maintenance 79
Measure 28
Measure Mode 28
Mounting 12

O
Operation
- Via HART Communicator 71
- Via Local Display 21

P
Panel Mounting 12
Passcode Access 24
Pipe Mounting 13
Product Safety Specifications 9

Q
Quick Start 3

R
Reference 1
Reference Documents 1

S
Solution Calibration 37
Specifications 1, 7
Status 41
Status Mode 30
Structure Diagrams 81
Surface Mounting 13

U
Unpacking 11

W
Wiring 14

ISSUE DATES
OCT 2000
MAR 2003
OCT 2005
AUG 2006
NOV 2006
AUG 2009

Vertical lines to the right of text or illustrations indicate areas changed at last issue date.

IPS Corporate Headquarters
5601 Granite Parkway Suite 1000
Plano, TX 75024
www.ips.invensys.com

Foxboro Global Client Support
Inside U.S.: 1-866-746-6477
Outside U.S.: 1-508-549-2424 or contact your local Foxboro representative.
Facsimile: 1-508-549-4999

Invensys, Foxboro, I/A Series, and IPS Logo are trademarks of Invensys plc, its subsidiaries, and affiliates.
All other brand names may be trademarks of their respective owners.

Copyright 2000-2009 Invensys Systems, Inc.
All rights reserved

MB 100 Printed in U.S.A. 0809