FOUNDATION Fieldbus Communication

Absolute, Gauge, and Differential Pressure Transmitters

Master Instruction

MI 020-612

Release date June 10, 2019

www.schneider-electric.com

Legal Information

The Schneider Electric brand and any trademarks of Schneider Electric SE and its subsidiaries referred to in this guide are the property of Schneider Electric SE or its subsidiaries. All other brands may be trademarks of their respective owners.

This guide and its content are protected under applicable copyright laws and furnished for informational use only. No part of this guide may be reproduced or transmitted in any form or by any means (electronic, mechanical, photocopying, recording, or otherwise), for any purpose, without the prior written permission of Schneider Electric.

Schneider Electric does not grant any right or license for commercial use of the guide or its content, except for a non-exclusive and personal license to consult it on an "as is" basis. Schneider Electric products and equipment should be installed, operated, serviced, and maintained only by qualified personnel.

As standards, specifications, and designs change from time to time, information contained in this guide may be subject to change without notice.

To the extent permitted by applicable law, no responsibility or liability is assumed by Schneider Electric and its subsidiaries for any errors or omissions in the informational content of this material or consequences arising out of or resulting from the use of the information contained herein.

Important Information

Read these instructions carefully and look at the equipment to become familiar with the device before trying to install, operate, service, or maintain it. The following special messages may appear throughout this manual or on the equipment to warn of potential hazards or to call attention to information that clarifies or simplifies a procedure.

The addition of either symbol to a “Danger” or “Warning” safety label indicates that an electrical hazard exists which will result in personal injury if the instructions are not followed.

This is the safety alert symbol. It is used to alert you to potential personal injury hazards. Obey all safety messages that accompany this symbol to avoid possible injury or death.

⚠ DANGER

DANGER indicates a hazardous situation which, if not avoided, **will result in** death or serious injury.

Failure to follow these instructions will result in death or serious injury.

⚠ WARNING

WARNING indicates a hazardous situation which, if not avoided, **could result in** death or serious injury.

⚠ CAUTION

CAUTION indicates a hazardous situation which, if not avoided, **could result in** minor or moderate injury.

NOTICE

NOTICE is used to address practices not related to physical injury.

Please Note

Electrical equipment should be installed, operated, and maintained only by qualified personnel. No responsibility is assumed by Schneider Electric for any consequences arising out of the use of this material.

A qualified person is one who has skills and knowledge related to the construction, installation, and operation of electrical equipment and has received safety training to recognize and avoid the hazards involved.

Table of Contents

Introduction 9
- Reference Documents 10
- Transmitter Identification 11
- Standard Specifications 12
  - Operative Limits 12
  - Span and Range Limits 12
  - Maximum Static, Overrange, and Proof Pressure Ratings 14
  - Elevated Zero and Suppressed Zero 15
  - Sensor Fill Fluid 15
  - Minimum Allowable Absolute Pressure vs Process Temperature 15
  - Mounting Position 16
  - Approximate Mass 16
  - Process Connections 16
  - Process Wetted Materials 17
  - Reference (Low) Pressure Side Materials 17
  - Electrical Connections 17
  - Switching and Indirect Lightning Transients 17
  - Field Wiring Reversal 17
  - Adjustable Damping 18
  - Output Signal 18
  - Calibration High Point and Calibration Low Point 18
  - External Zero Adjustment 18
  - Cable Shielding 18
  - Supply Voltage 18
  - Electrical Ground Connections 19
  - Remote Communication 19
  - Digital Output 19
- Agency Certifications 19
  - Electrical Certifications 20

Installation 22
- Transmitter Mounting 22
  - Sanitary Process Connections 25
  - Pulp and Paper Process Connections 27
  - Manifold Mounting of Differential Pressure Transmitters 29
  - Mounting a Differential Pressure Transmitter Using a Bracket 30
- Typical Piping for Absolute and Gauge Pressure Transmitters 35
  - Piping for Direct Connect AP and GP Transmitters 35
  - Piping for Biplanar AP and GP Transmitters 36
- Additional Steps for Differential Pressure Transmitter Installation 37
  - Venting and Draining 37
  - Installation of Flow Measurement Piping 39
  - Filling the System with Seal Liquid 41
- Positioning the Housing 42
- Positioning the Display 42
- Setting the Write Protect Jumper 43

Setting the Simulate Jumper 44
Cover Locks 45
Wiring 45
Accessing Transmitter Field Terminals 45
Wiring Notes 46
Wiring the Transmitter 47
Installing the FOUNDATION Fieldbus Support Files 49
Putting a Differential Pressure Transmitter into Operation 49
Taking a Differential Pressure Transmitter out of Operation 50
Operation with the Local Display 51
Entering Strings and Numeric Values 52
Reranging 53
Viewing the Database 54
Testing the Display 57
Messages 58
Configuration 59
Configuration Using the Optional Local Display 59
Messages 68
Configuration from a FOUNDATION Fieldbus Host 68
Transmitter FOUNDATION Fieldbus Block Model 69
Resource Block 70
Transducer Block 75
Analog Input (AI) Block 77
Display Block 80
PID Block 81
Disabling the Link Active Scheduler (LAS) 83
Upgrading the Firmware 84
Calibration 85
FoxCal™ Multiple Calibration Technology 85
Enabling and Disabling FoxCal™ 85
One-Point Calibration at LRV 86
Two-Point Field Calibration 86
Calibration Notes 86
Calibration Setup 88
Field Calibration Setup 89
Bench Calibration Setup 91
Calibration Using the Optional Local Display 93
Messages 95
Using the External Zero Button 96
Zero Adjustment for Transmitters with the Optional Display 96
Zero Adjustment for Transmitters without the Optional Display 97
Calibration from a FOUNDATION Fieldbus Host 98
If Device Description (DD) Methods are Unavailable 98
Using Device Description (DD) Methods 99
Using Device Type Manager (DTM) Methods 100
Troubleshooting 101
Simulation Mode 101

Restart 101
Switch Mode Checklist 102
Schedule Download Checklist 102
Block Errors 102
Inter-Board Communication Errors/Status 104
Fieldbus Diagnostic Methods 104
Maintenance 105
Parts Replacement 105
Replacing the Terminal Block Assembly 105
Replacing the Vent Plug 106
Adding the Optional Display 107
Rotating Process Covers for Venting 107
Dimensions 109
Direct Connect AP and Direct Connect GP Transmitters 109
Biplanar AP and Biplanar GP Transmitters 112
DP Transmitters 115
Parts 121
Model Codes 121
Absolute and Gauge Pressure Transmitters 121
Differential Pressure Transmitters 131
Transmitter Parts 138
Parts for Direct Connect AP and GP Transmitters 138
Parts for Biplanar AP and GP Transmitters 140
Parts for DP Transmitters 145
Housing Covers 152
Optional Selections 153
Mounting Bracket Sets for Direct Connect Transmitters 153
Mounting Bracket Sets for DP and Biplanar Transmitters 155
Vent Screw (Option -V1) 157
Block and Bleed Valve (Options -V2, -V3, and -V4) 157
Adapter Plates (Options -P1 to -P8) for Direct Mounting to Coplanar Manifolds 158
LCD Indicator (Digital Display) Assembly (Option -L1) 159
Conduit Connections (Options -A1 and -A3) 159
Custody Transfer Lock and Seal (Option -Z2) 160
Ermeto Connectors (Options -E3 and -E4) 160
Metric Process Connection (Option -R) 161
Recommended Spare Parts 161
Appendix A: FOUNDATION Fieldbus Parameters 165
Resource Block Parameters 165
Transducer Block Parameters 173
Display (MAO) Block Parameters 180
Analog Input (AI) Block Parameters 181
PID Block Parameters 189

Introduction

These pressure transmitters measure pressure by applying the pressure to a piezoresistive silicon microsensor within the sensor assembly. The microsensor converts the pressure to a change in resistance, and the resistance change is converted to a signal that is proportional to the pressure.

- Absolute pressure transmitters measure pressure relative to vacuum. Gauge pressure transmitters measure pressure relative to ambient air pressure. Both absolute and gauge transmitters are used in a wide variety of oil, gas, water and industrial applications.
- Differential pressure transmitters measure the difference between *two* pressures applied to opposite sides of the sensor. The output signal is proportional to either the differential pressure or its square root.

  Differential pressure transmitters are often used for measuring fluid flow rates across a primary device such as an orifice plate, but can also be used for other types of differential pressure measurements such as liquid level, interface level, or density measurements.

The FOUNDATION Fieldbus digital measurement signals are transmitted to remote receivers over the same two wires that supply power to the transmitter electronics. These wires also carry two-way data signals between the transmitter and remote communication devices.

The pressure transmitter can be supplied with direct-connect or remote pressure seals to isolate the measuring element from corrosive or viscous fluids.

The measurement signal is a FOUNDATION Fieldbus digital signal for full communication with any FOUNDATION Fieldbus host equipped with a FOUNDATION Fieldbus Interface Module. The communication functionality permits you to reconfigure a transmitter from a remote Fieldbus host personal computer, or a DCS equipped with a FOUNDATION Fieldbus Interface Module.

The FOUNDATION Fieldbus is an all-digital, serial, two-way communication system that runs at 31.25 kbps, interconnecting a Fieldbus host and various field devices such as process sensors/transmitters, valves/actuators, and controllers — all connected in parallel to the same bus. Both ends of the bus must be terminated with standard characteristic impedance networks to minimize reflected signals. Power to all devices is supplied by a dc Fieldbus power source connected anywhere on the bus.

NOTE: The power supply must be a FOUNDATION Fieldbus-compatible power supply.

The communication signals between a Fieldbus host and all other bus-connected devices, which are superimposed on the dc power signal on the bus, are controlled according to a strict cycle schedule and protocol. During intervals when control and measurement signals are not being transmitted according to the schedule, the devices are free to communicate with each other for such functions as alarms, trend recording/indicating, etc.

The FOUNDATION Fieldbus uses “Function Blocks” (standardized automation functions) to implement measurement and control strategies. These blocks may be distributed throughout the array of devices in whatever manner is most efficient. A major advantage of the concept is that devices from many manufacturers can be intermixed in a seamless and integrated manner. Since all devices in a system connect to the same wire pair, the system requires less wire than comparable systems, fewer intrinsic safety barriers, and fewer interface cards, resulting in significant cost savings.

This FOUNDATION Fieldbus system implements the following blocks: Resource Block, Transducer Block, Analog Input (AI) Blocks, Proportional Integral Derivative (PID) Block, and Multiple Analog Output (MAO) Block.

- The Resource Block contains the FOUNDATION Fieldbus parameters needed to define the device description for the transmitter.

- The Transducer Block handles all configurable parameters that define the sensor, transmitter hardware, and manufacturer-specific data.
- The AI Blocks contain all configurable parameters needed to define the input data for use with the other function blocks.
- The PID Block contains parameters required for PID control.
- The MAO Block is used to connect the optional digital display to external process variables.

Reference Documents

Document	Description
Instructions	
MI 020-611	Absolute, Gauge, and Differential Pressure Transmitters with HART Communication and SIL 2
MI 020-612	Absolute, Gauge, and Differential Pressure Transmitters with FOUNDATION Fieldbus Communication
MI 020-613	Absolute, Gauge, and Differential Pressure Transmitters with Low Power
MI 020-360	Wiring Guidelines for FOUNDATION Fieldbus Transmitters
MI 020-328	Bubble Type Installation for Liquid Level
MI 020-329	High Accuracy Flow Measurement
MI 020-369	Pressure Seals
MI 020-543	FM/CSA Safety Information
MI 020-544	ATEX/IECEx Safety Information
MI 022-138	Bypass Manifolds - Installation and Maintenance
MI 022-335	Model CO Compact Orifice
Dimensional Prints	
DP 020-342	PSFLT Pressure Seals
DP 020-343	PSFPS and PSFES Pressure Seals
DP 020-345	PSFAR Pressure Seals
DP 020-346	PSFAD Pressure Seals
DP 020-347	PSTAR Pressure Seals
DP 020-348	PSTAD Pressure Seals
DP 020-349	PSISR Pressure Seals
DP 020-350	PSISD Pressure Seals
DP 020-351	PSSCR Pressure Seals
DP 020-353	PSSCT Pressure Seals
DP 020-354	PSSSR Pressure Seals
DP 020-355	PSSST Pressure Seals
DP 020-357	PSFFD Pressure Seals
DP 022-335	Model CO Compact Orifice
Parts List	
PL 006-172	Model CO Compact Orifice
Technical Information	
TI 1-50a	Liquid Density Measurement

Document	Description
TI 001-051	Liquid Interface Measurement
TI 001-052	Liquid Level Measurement
TI 37-75b	Transmitter Material Selection Guide
TI 037-097	Process Sealing of Pressure Transmitters for Use in Class I, Zone 0, 1, and 2 Hazardous Locations

Transmitter Identification

The diagram shows a sample transmitter data plate. This example is for an IGP10S transmitter; the details may be slightly different for other transmitter models.

- For a complete explanation of the model code, refer to *Model Codes, page 121*.
- The firmware version is identified on the top line of the display when you select **VIEW DB** in the top level menu (*Top Level Menu, page 52*).

Figure 1 - Data Plate Contents

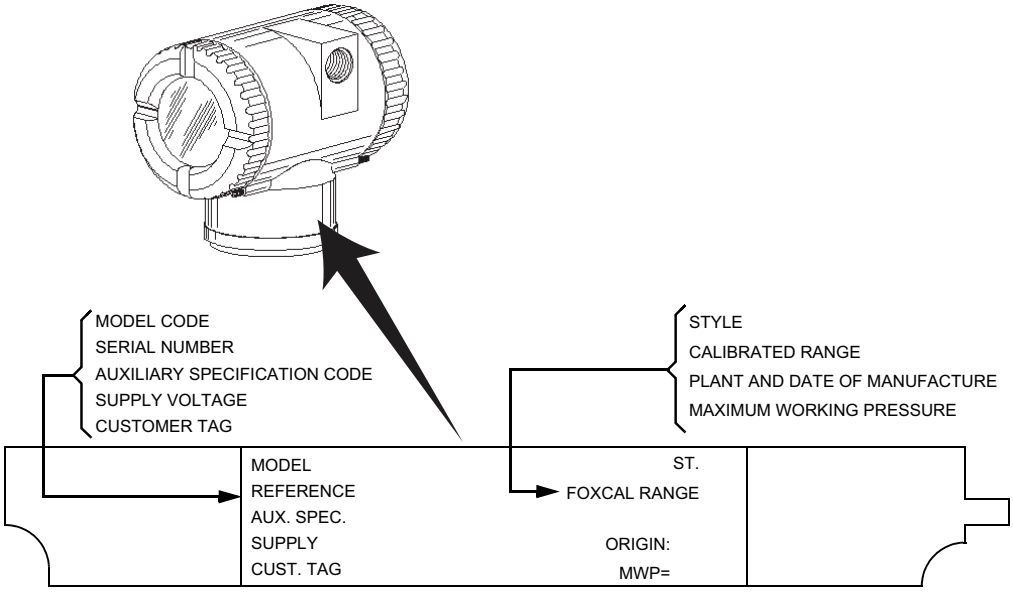

NOTE: The procedures in this document are for transmitters with a **DEV_REV** of 01 HEX (1 DEC) or higher.

The initial PDTag of the device is:

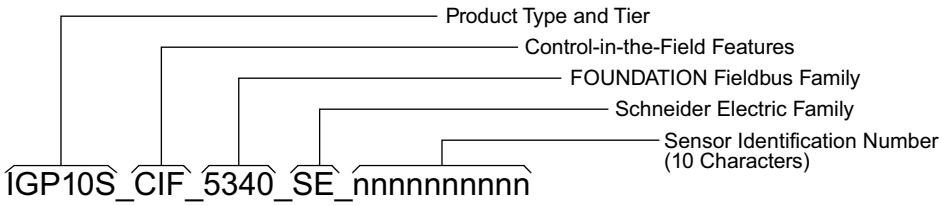

The Device ID is:

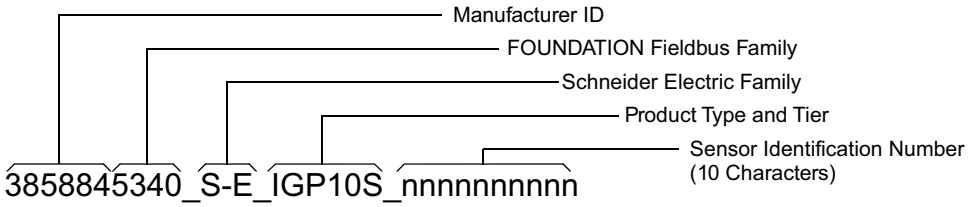

Standard Specifications

Operative Limits

Influence	Operative Limits[1]
Sensor Body Temperature[2]	
PVDF inserts	-7 and +82°C (+20 and 180°F)
Silicone fill fluid	-46 and +121°C (-50 and +250°F)[3 4]
Fluorinert fill fluid	-29 and +121°C (-20 and +250°F)
NEOBEE® fill fluid	-18 and +121°C (0 and 250°F)
Electronics Temperature	
Without LCD	-40 and +85°C (-40 and +185°F)[5 6]
With LCD	-40 and +85°C (-40 and +185°F)[5 6 7]
Relative Humidity	0 and 100%[8]
Supply Voltage	9 V dc and 32 V dc
Mounting Position	No limit
Vibration	
Aluminum Housing	Per IEC 60770 for “field with high vibration level or pipeline with high vibration level”: 0.42 mm peak-to-peak displacement from 10 to 60 Hz, 3 “g” constant acceleration input over a frequency range of 60 to 1000 Hz
Stainless Steel Housing	Per IEC 60770 for “field with general application or pipeline with low vibration level”: 0.3 mm peak-to-peak displacement from 10 to 60 Hz, 2 “g” constant acceleration input over a frequency range of 60 to 1000 Hz

Span and Range Limits

Limits for Direct Connect Transmitters

Table 1 - Span Limits for Direct Connect Transmitters

Code	Span Limits[9]
D	3.4 and 1380 kPa (0.5 and 200 psi)
E	0.034 and 13.8 MPa (5 and 2000 psi)
F	0.52 and 41.4 MPa (75 and 6000 psi)[10]

1. Normal Operating Conditions and Operative Limits are defined per ANSI/ISA 51.1-1979 (R1993)
2. Refer to MI 020-369 for temperature limits with pressure seals.
3. Selection of Option -J extends the low temperature operative limit of transmitters with silicone filled sensors down to -50°C (-58°F). Performance is not assured below -29°C. Sensor damage may occur if process is frozen. Contact Global Customer Support for availability of this option.
4. -46 and +50°C (-50 and +122°F) for biplanar AP transmitters.
5. -40 and +75°C (-40 and +167°F) for transmitters with ATEX flameproof classification.
6. -40 and +50°C (-40 and +122°F) for biplanar AP transmitters.
7. Display updates are slowed and readability is decreased at temperatures less than -20°C (-4°F).
8. Relative humidity refers to transmitters with housing covers installed and conduit entrances sealed. To maintain IEC IP66/IP67 and NEMA Type 4X protection, plug the unused conduit opening with the metal plug provided. Use a suitable thread sealant on both conduit connections. In addition, the threaded housing covers must be installed. Turn covers to seat the o-ring into the housing, then continue to hand-tighten until the cover contacts the housing metal-to-metal.
9. Values listed are in absolute or gauge pressure units, as applicable.
10. Available for gauge pressure transmitters only.

Table 2 - Range Limits for Direct Connect Transmitters

Code	Range Limits — AP	Range Limits — GP
D	0 and 1400 kPaa (0 and 200 psia)	0 and 1400 kPag (0 and 200 psig)
E	0 and 14 MPaa (0 and 2000 psia)	0 and 14 MPag (0 and 2000 psig)[11]
F	n/a	0 and 42 MPag (0 and 6000 psig)[11]

Limits for Biplanar Transmitters

Table 3 - Span Limits for Biplanar Transmitters

Code	Span Limits[12]
B	0.12 and 50 kPa (0.5 and 200 inH_2O)
C	0.62 and 250 kPa (2.49 and 1000 inH_2O)
D	26 and 2070 kPa (3.75 and 300 psi)[13]
E	0.26 and 20.7 MPa (37.5 and 3000 psi)[13]
F	1.1 and 34.5 MPa (165 and 5000 psi)[14] [13]

Table 4 - Range Limits for Biplanar Transmitters

Code	Range Limits — AP	Range Limits — GP
B	0 and 50 kPaa (0 and 200 inH_2Oa)	-50 and +50 kPag (-200 and +200 inH_2Og)
C	0 and 250 kPaa (0 and 1000 inH_2Oa)	-100 and +250 kPag (-401 and +1000 inH_2Og)
D	0 and 2070 kPaa (0 and 300 psia)[13]	-100 and +2100 kPag (-14.7 and +300 psig)[13]
E	0 and 20.7 MPaa (0 and 3000 psia)[13]	-0.1 and +21 MPag (-14.7 and +3000 psig)[13]
F	n/a	-0.1 and +35 MPag (-14.7 and +5000 psig)[13]

Limits for DP Transmitters

Table 5 - Span Limits for DP Transmitters

Code	Span Limits
B	0.12 and 50 kPa; 0.5 and 200 inH_2O; 1.2 and 500 mbar
C	0.62 and 250 kPa; 2.5 and 1000 inH_2O; 6.2 and 2500 mbar
D	0.026 and 2.07 MPa; 3.75 and 300 psi; 0.26 and 20.7 bar
E	0.26 and 20.7 MPa; 37.5 and 3000 psi; 2.6 and 207 bar

11. Direct connect GP transmitters with Span Code E or F can tolerate vacuum down to -0.1 MPa (-14.7 psi). However, to measure vacuum accurately with a GP transmitter, a biplanar Structure Code is required.
12. Values listed are in absolute or gauge pressure units, as applicable.
13. Span limit, maximum working pressure, maximum overrange pressure, and maximum static pressure (d/p) are derated for optional IEC 61518 Construction and optional Bolting except for codes -D3, -D7, and -B2. Option -D1 is derated to 2320 psi. Options -D5 and -B1 are derated to 2175 psi. Options -D2, -D4, -D6, and -D8 are derated to 1500 psi. Option -B3 is derated to 2900 psi.
14. Available for gauge pressure transmitters only.

Table 6 - Range Limits for DP Transmitters

Code	Range Limits
B	-50 and +50 kPa (-200 and +200 inH_2O)
C	-250 and +250 kPa (-1000 and +1000 inH_2O)
D	-0.10 and +2.07 MPa (-14.7 and +300 psi)
E	0 and 21 MPa (0 and 3000 psi)

Maximum Static, Overrange, and Proof Pressure Ratings

⚠ DANGER

HAZARD OF EXPLOSION

Exceeding the proof pressure can cause the sensor to rupture forcefully. Avoid exposing the transmitter to the proof pressure limit.

Failure to follow these instructions will result in death or serious injury.

NOTICE

POTENTIAL EQUIPMENT DAMAGE

Exceeding the overrange pressure limit for the transmitter can cause damage to the transmitter, degrading its performance. The transmitter could become nonfunctional after exceeding the overrange pressure. Avoid exposure to the overrange pressure limit.

Failure to follow these instructions can result in equipment damage.

Ratings for Direct Connect AP and GP Transmitters

Table 7 - Maximum Overrange and Proof Pressure for Direct Connect Transmitters

Span Limit Code	Maximum Overrange Pressure	Maximum Proof Pressure[15]
D	2.1 MPa (300 psi)	5.51 MPa (800 psi)
E	20.7 MPa (3,000 psi)	55.1 MPa (8,000 psi)
F[16]	59.1 MPa (8,580 psi)	165 MPa (24,000 psi)

Ratings for DP Transmitters and Biplanar AP and GP Transmitters

For DP transmitters and for AP and GP transmitters with biplanar structures, pressure ratings may be affected by bolting options and other model code selections.

15. Meets ANSI/ISA Standard S82.03-1988.
16. Available for gauge pressure transmitters only.

Table 8 - Maximum Static/Overrange and Proof Pressure for DP and Biplanar Transmitters

Transmitter Configuration[17]	Maximum Static[18] and Overrange Pressure[19]	Maximum Proof Pressure[20]
Standard (B7 steel) with Span Codes B to E, or with Option -B2 (17-4 PH ss), -D3, -D7, -P3, or -P7	25 MPa (3,626 psi)	100 MPa (14,500 psi)
Standard with Span Code F[21]	40 MPa (5,800 psi)	100 MPa (14,500 psi)
Option -B3 (B7M), -P4, or -P8	20 MPa (2,900 psi)	70 MPa (11,150 psi)
With Option -D1	16 MPa (2,320 psi)	64 MPa (9,280 psi)
Option -B1 (316 ss), -D5, -P2, or -P6	15 MPa (2,175 psi)	60 MPa (8,700 psi)
With Option -D2, -D4, -D6, or -D8[22]	10 MPa (1,500 psi)	40 MPa (6,000 psi)
Option -D9 (17-4 PH ss) or -Y[23]	40 MPa (5,800 psi)	100 MPa (14,500 psi)
With Structure Code 78 or 79 (PVDF insert)[24]	2.1 MPa (300 psi)	8.4 MPa (1,200 psi)

Elevated Zero and Suppressed Zero

For applications requiring an elevated or suppressed zero, do not exceed the maximum span and the upper and lower range limits of the transmitter.

Sensor Fill Fluid

- Silicone fluid — dodecamethylpentasiloxane
- 3M™ Fluorinert™ Electronic Liquid FC-43 — perfluorotributylamine
- NEOBEE® M-20 — propylene glycol di(octanoate/decanoate)

Minimum Allowable Absolute Pressure vs Process Temperature

- With silicone fill fluid: up to 121°C (250°F) at full vacuum[25]
- With inert fill fluid: refer to the graph[25] [26]

17. Refer to the model code for option descriptions, and for applications and restrictions related to the items listed in the table.
18. Static pressure is relevant only for differential pressure transmitters.
19. Either side can be at higher pressure during overrange.
20. Meets ANSI/ISA Standard S82.03-1988.
21. Available for gauge pressure transmitters only.
22. Limited to operating temperatures ranging from -10 to +80°C (14 to 176°F).
23. Differential pressure transmitters only.
24. With PVDF insert, temperature limits are -7 and +82°C (20 and 180°F).
25. For direct connect IGP50S transmitters with Span Code D, the minimum allowable pressure is 0 psig.
26. For biplanar IAP50S transmitters, up to 50°C (120°F) at full vacuum.

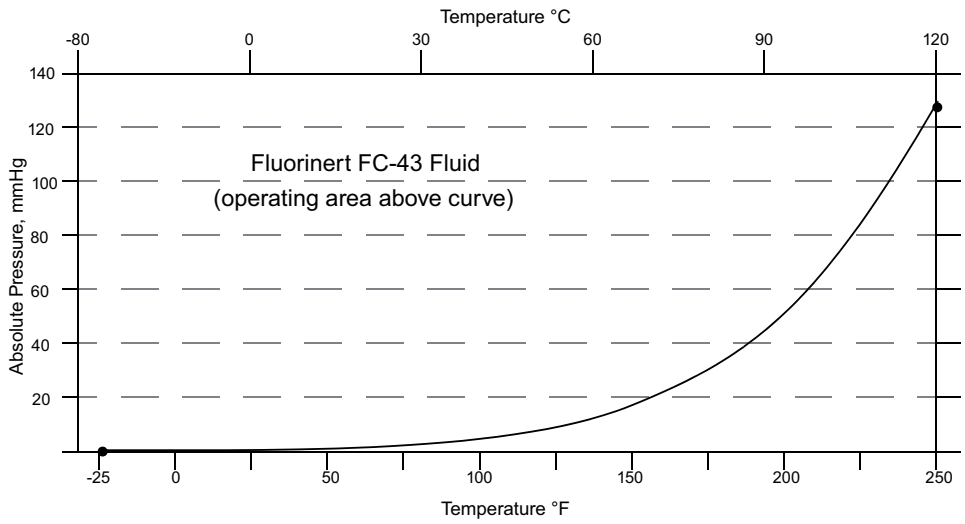

Mounting Position

The transmitter can be mounted in any orientation with considerations specified in *Installation, page 22*. The housing can be rotated up to one full turn to any desired position for access to adjustments, display, or conduit connections. Refer to *Positioning the Housing, page 42*.

The display (if applicable) can also be rotated at 90° increments within the housing. Refer to *Positioning the Display, page 42*.

NOTE:

- Mount the transmitter so that any moisture condensing or draining into the field wiring compartment can exit through one of the two threaded conduit connections.
- Use a suitable thread sealant on all connections.
- Position effect zero shift for all calibrated spans can be calibrated out by readjusting zero output after installation.

Approximate Mass

Transmitter mass does not include pressure seals.

Transmitter and Option(s)	Approximate Mass
Direct Connect AP or GP, Aluminum Housing	1.4 kg (3.1 lb)
Biplanar or Traditional DP Structure, Aluminum, without Process Connectors	3.5 kg (7.8 lb)
Biplanar or Traditional DP Structure, Aluminum, with Process Connectors	4.2 kg (9.2 lb)
Optional Display	Add 0.2 kg (0.4 lb)
Substitute 316 ss Housing	Add 1.1 kg (2.4 lb)
Low Profile/Biplanar LP1 Structure	Add 0.1 kg (0.2 lb)
Low Profile/Biplanar LP2 Structure	Add 0.8 kg (1.8 lb)

Process Connections

- AP and GP transmitters with direct connect structures can be connected directly to the process using their 1/2 NPT external/internal thread, M20 external thread, or optional G 1/2 B connection.

- If an optional mounting bracket is used, the transmitter can be connected to the process via the 1/2 NPT external/internal thread, M20 external thread, 1/4 NPT internal thread, or G 1/2 B (model code option -G) connection.
- Transmitters with a sanitary process connection connect to the process with a Tri-Clamp process connector or a mini tank spud seal.
- Transmitters with a pulp and paper process connection connect to the process with a threaded or sleeve type connection.

• DP transmitters, and AP or GP transmitters with biplanar stuctures, connect to the process via a 1/4 NPT thread or an optional process connector.

Process Wetted Materials

All process wetted parts are NACE MR0175 and MR0103 compliant.

Part	Material(s)
Diaphragm	316L ss, nickel alloy[27], Co-Ni-Cr, Monel, gold-plated 316L ss, or tantalum
Process Connections[28] and Covers	316 ss, nickel alloy[27], Monel, or PVDF inserts
Pressure Seals	Refer to MI 020-369

Reference (Low) Pressure Side Materials

Silicone, Pyrex™, RTV silicone, or 316L ss.

Electrical Connections

Field wires enter through 1/2 NPT or M20 threaded entrances on either side of the electronics housing. Leads terminate under screw terminals and washers on the terminal block in the field terminal compartment.

⚠⚠WARNING

EXPLOSION HAZARD

To help prevent possible explosions and to maintain flameproof, explosionproof, and dust-ignitionproof protection, observe applicable wiring practices. Plug the unused conduit openings with approved conduit plugs. Both plug and conduit must engage a minimum of five full threads for 1/2 NPT connections; seven full threads for M20 connections.

Failure to follow these instructions can result in death or serious injury.

Switching and Indirect Lightning Transients

The transmitter can withstand a transient surge up to 2000 V (common mode) or 1000 V (normal mode) without permanent damage. The output shift is less than 1.0%. (Per ANSI/IEEE C62.41-1980 and IEC Std. 61000-4-5.)

Field Wiring Reversal

The field wiring is polarity insensitive. Reversing the field wiring does not damage the transmitter; the transmitter functions when wired either way.

27. Equivalent to Hastelloy® C-276. Hastelloy is a registered trademark of Haynes International, Inc.
28. Includes sanitary and pulp and paper process connections.

Adjustable Damping

Damping is user-selectable to values of 0.25, 0.5, 1, 2, 4, 8, 16, or 32 seconds. Selecting a value of **DAMP1/4** in the Damping menu provides the fastest response.

Output Signal

FOUNDATION Fieldbus square root (for DP only) or FOUNDATION Fieldbus linear. The digital output is software-selectable and remotely configurable from a FOUNDATION Fieldbus host computer or a console equipped with a FOUNDATION Fieldbus Interface Module. It is also locally configurable with the pushbuttons on the optional display.

Calibration High Point and Calibration Low Point

The transmitter's span, or calibrated range, is adjustable using two points: the Calibration High Point (100% of the transmitter's calibrated range) and Calibration Low Point (0% of the transmitter's calibrated range). Calibrated range is adjustable from a FOUNDATION Fieldbus host computer, a console equipped with a FOUNDATION Fieldbus Interface Module, or the transmitter's pushbuttons on the optional local display.

External Zero Adjustment

An optional external self-contained moisture-sealed pushbutton allows you to locally reset to zero without removing the housing cover.

Cable Shielding

For best performance, fieldbus cables should be shielded. Use common multi-conductor (multi-core) "instrument cable" with one or more twisted pairs; an overall, metallized shield; and a shield wire. You can also use cable that has individually shielded pairs. For new installations, ask cable vendors for "fieldbus cable."

Connect the shield on each spur to the trunk shield. Connect the overall shield to ground at one point only. For most networks, the grounding point can be located anywhere.

In some instances, better high-frequency EMI shielding requires that the shield be connected to ground at multiple points.[29] Fieldbus provides for this by allowing an RF ground at multiple points, consisting of a small capacitor from shield to ground.

Supply Voltage

The power supply (a FOUNDATION Fieldbus Power Supply Module) must be capable of providing at least 17 mA for each transmitter connected.

The following table summarizes the requirements.

Minimum Supply Voltage	9 V dc
Recommended Supply Voltage	24 V dc
Maximum Supply Voltage	32 V dc

29. See Mardiguian, M., and White, D. R. J., *EMI Control Methodology and Procedures*.

Electrical Ground Connections

The transmitter is equipped with an internal ground connection within the field wiring compartment and an external ground connection at the base of the electronics housing. To minimize galvanic corrosion, place the wire lead or contact between the captive washer and loose washer on the external ground screw.

Do not ground the shield at the transmitter. Ground the shield at one place per segment only. Refer to MI 020-360 for wiring guidelines.

Remote Communication

The transmitter communicates bidirectionally over the 2-wire field wiring to other FOUNDATION Fieldbus devices located anywhere in a Division 2 or nonhazardous area, a FOUNDATION Fieldbus host anywhere in a nonhazardous area and/or to a DCS equipped with a FOUNDATION Fieldbus Interface Module.

Communication Format

Communication is based upon the FOUNDATION Fieldbus communication protocol. The signals are superimposed on the transmitter power/signal leads.

Digital Output

The transmitter sends its pressure measurement to a DCS as a digital signal. Remote communication can occur between the transmitter and other FOUNDATION Fieldbus devices and hosts.

Data transmission rate	31.25 kbits/second
Maximum communication distance, including spur length	1,900 m (6,235 ft)
Minimum spur length	1 m (3.3 ft)
Maximum spur length for intrinsically safe installations	30 m (98 ft)
Maximum spur length for other installations	120 m (395 ft)

Agency Certifications

⚠⚠ WARNING

EXPLOSION HAZARD

To help prevent possible explosions and to maintain flameproof, explosionproof, and dust-ignitionproof protection, observe applicable wiring practices. Plug the unused conduit openings with approved conduit plugs. Both plug and conduit must engage a minimum of five full threads for 1/2 NPT connections; seven full threads for M20 connections.

Failure to follow these instructions can result in death or serious injury.

⚠ WARNING

RISK OF MOISTURE INGRESS

To maintain IEC IP66/IP67 and NEMA Type 4X protection, plug the unused conduit opening with the metal plug provided. Use a suitable thread sealant on both conduit connections. In addition, the threaded housing covers must be installed. Turn covers to seat the o-ring into the housing, then continue to hand-tighten until the cover contacts the housing metal-to-metal.

Failure to follow these instructions can result in death or serious injury.

Wiring restrictions required to maintain electrical certification of the transmitter are provided in these instructions. Refer to *Wiring, page 45*.

Electrical Certifications

These transmitters have been designed to meet the electrical safety descriptions listed in the following table. For detailed information or status of testing laboratory approvals/certifications, contact Global Customer Support.

Refer to *Model Codes, page 121* for the availability of electrical safety design codes with specific transmitter structures.

Table 9 - Electrical Certifications

Agency Certification, Types of Protection, and Area Classification	Application Conditions[30]	Model Code Option
ATEX intrinsically safe, Ex ia IIC	Temperature Class T4, Ta= -40°C to +80°C	AA
ATEX flameproof, Ex d IIC	Temperature Class T6, T85°C, Ta= -40°C to +75°C	AD
ATEX multiple certifications (includes ATEX Codes AA and AN)	Applies to Codes AA and AN	AM[31]
ATEX protection type n, Ex ic IIC, or Ex nA	Temperature Class T4, Ta= -40°C to +80°C	AN
ATEX multiple certifications (includes ATEX Codes AA, AD and AN)	Applies to Codes AA, AN, and AD	AP[31]
INMETRO intrinsically safe, Ex ia IIC	Temperature Class T4, Ta= -40°C to +80°C	BA
INMETRO flameproof, Ex d IIC	Temperature Class T6, T85°C, Ta= -40°C to +75°C	BD
INMETRO multiple certifications (includes INMETRO Codes BA and BD)	Applies to codes BA and BD	BP[31]
CSA intrinsically safe, Zone certified Ex ia	Temperature Class T4A at 40°C and T3C at 85°C maximum ambient	CA
CSA zone certified flameproof Ex d IIC; also explosion proof, dust ignition-proof	T6, Maximum Ambient Temperature 75°C	CD
CSA multiple certifications (includes CSA Codes CA and CN)	Applies to codes CA and CN	CM[31]
CSA non-incendive, Zone certified Ex nA IIC	Temperature Class T4A at 40°C and T3C at 85°C maximum ambient	CN
CSA multiple certifications (includes CSA Codes CA, CD and CN)	Applies to codes CA, CD, and CN	CP[31]
Multi-marked ATEX and IECEx intrinsically safe, Ex ia IIC	Temperature Class T4, Ta = –40°C to +80°C	DA
Multi-marked ATEX and IECEx flameproof, Ex d IIC	Temperature Class T6, T85°C, Ta = –40°C to +75°C	DD
Multi-marked ATEX and IECEx multiple certifications, ia, ic	Applies to codes DA and DN	DM[31]
Multi-marked ATEX and IECEx protection type n, Ex ic IIC	Temperature Class T4, Ta = –40°C to +80°C	DN

30. Selection of Option -J extends the low temperature operative limit of transmitters with silicone filled sensors down to -50°C (-58°F).
31. When selecting an Electrical Safety Design Code that ends in “M” or “P,” you must permanently mark (check off in the rectangular block on the data plate) one type of protection only (ia, d, n, IS, NL, or XP). Do not change this mark once it has been applied.

Table 9 - Electrical Certifications (Continued)

Agency Certification, Types of Protection, and Area Classification	Application Conditions[32]	Model Code Option
Multi-marked ATEX and IECEx multiple certifications, ia, ic, and d	Applies to codes DA, DD, and DN	DP[33]
IECEx intrinsically safe, Ex ia IIC	Temperature Class T4, Ta= -40°C to +80°C	EA
IECEx flameproof, Ex d IIC	Temperature Class T6, Ta= -40°C to +75°C	ED
IECEx multiple certifications, ia, ic, nA	Applies to Codes EA and EN	EM[33]
IECEx protection type n, Ex ic IIC, or Ex nA	Temperature Class T4, Ta= -40°C to +80°C	EN
IECEx multiple certifications, ia, ic, nA, and d	Applies to Codes EA, EN, and ED	EP[33]
FM Classes I, II and III Division 1 intrinsically safe, AEx ia IIC	Temperature Class T4, Ta= -40°C to +80°C	FA
FM Classes I, II and III Division 1 explosion proof, dust-ignition proof, Zone approved AEx d IIC	Temperature Class T6 at 75°C and T5 at 85°C maximum ambient	FD
FM multiple certifications (includes FM Codes FA or FN)	Applies to codes FA or FN	FM[33]
Classes I, II and III FM Division 2 non-incendive, Zone approved AEx nA IIC	Temperature Class T4, Ta= -40°C to +80°C	FN
FM multiple certifications (includes FM Codes FA, FD or FN)	Applies to codes FA, FD, or FN	FP[33]
EAC intrinsically safe, Ex ia	Temperature Class T4, Ta= -40°C to +80°C	RA
EAC flameproof, Ex d	Temperature Class T4, Ta= -40°C to +75°C	RD
EAC protection type n, Ex ic IIC or Ex nA	Temperature Class T4, Ta= -40°C to +80°C	RN
Multi-marked for ATEX, CSA, and FM Intrinsically Safe Application	Applies to codes FA, CA, and AA	MA[34]
No certification	n/a	ZZ

32. Selection of Option -J extends the low temperature operative limit of transmitters with silicone filled sensors down to -50°C (-58°F).
33. When selecting an Electrical Safety Design Code that ends in “M” or “P,” you must permanently mark (check off in the rectangular block on the data plate) one type of protection only (ia, d, n, IS, NL, or XP). Do not change this mark once it has been applied.
34. When selecting Electrical Safety Design Code MA, you must permanently mark (check off in the rectangular block on the data plate) intrinsically safe certifications for ATEX, CSA, or FM, as applicable. Do not change this mark once it has been applied.

Installation

⚠ DANGER

HAZARD OF ELECTRIC SHOCK, EXPLOSION, OR ARC FLASH

The main electronics enclosure for some models is manufactured from an aluminum alloy. In rare cases, ignition sources due to impact and friction sparks could occur. This must be considered during installation, particularly if the equipment is installed in a Zone 0 location.

Failure to follow these instructions will result in death or serious injury.

⚠⚠ WARNING

RISK OF ELECTROSTATIC CHARGE AND DUST INGRESS

- When installed in a flammable dust zone, under certain extreme circumstances an incendive electrostatic charge may build up on the painted surfaces, which are non-conducting. Therefore, take precautions to prevent the build-up of electrostatic charge; for example, place the equipment in a location where a charge-generating mechanism (such as wind-blown dust) is unlikely to be present, and clean with a damp cloth.
- When installed in a flammable dust zone, ensure that the cable entry maintains the dust-tightness (IP6X) of the enclosure.

Failure to follow these instructions can result in death, serious injury, or equipment damage.

NOTICE

POTENTIAL EQUIPMENT DAMAGE

To avoid damage to the transmitter sensor, do not use any impact devices, such as an impact wrench or stamping device, on the transmitter.

Failure to follow these instructions can result in equipment damage.

Transmitter Mounting

All transmitters can be mounted to a vertical or horizontal pipe or surface using the optional mounting set. See *Pipe Mounting, page 23* and *Surface Mounting, page 24*.

In addition, direct connect (non-biplanar) absolute and gauge pressure transmitters can be connected directly to the process; see *Direct Connected AP and GP Transmitter Mounting, page 24*. Differential pressure transmitters can be supported by the process piping; see *Process Mounting of a DP Transmitter Supported by Process Piping, page 25*.

Refer to *Dimensions, page 109* for dimensional information.

When mounting the transmitter, take these considerations into account:

- Mount the transmitter so that any moisture condensing or draining into the field wiring compartment can exit through one of the two threaded conduit connections.
- Use a suitable thread sealant on all connections.
- Do not mount the transmitter directly to the process using the 1/4 NPT internal thread. Use this thread only to connect to the process when the transmitter is mounted with an optional mounting set (Options -M1 through -M8).

- Do not mount the transmitter using the conduit connection and optional mounting set (-M1 through -M6) when vibration conditions exceed 20 m/s^2 (2 “g”).
- If the transmitter is not installed in the vertical position, readjust the zero output to help eliminate the position zero effect.

  NOTE: An absolute pressure transmitter cannot be zeroed by venting the transmitter to atmosphere.
- If structure codes 78/79 (PVDF inserts) are used with the transmitter, make the process connection directly to the PVDF inserts in the high and low side process covers.
- Where necessary, intrinsically safe equipment may be connected and disconnected while the circuits are energized.
- When used in a dust zone with flammable dusts, fibers, and flyings in groups IIIA, IIB, or IIC, the layer auto-ignition temperature must be at least 75°C greater than the maximum surface temperature marked in the dust coding.
- The equipment is certified for use only in ambient temperatures marked on the equipment and should not be used outside this range.
- Do not exceed the maximum process pressure indicated on the marking.
- There are no special checking or maintenance conditions. Periodically inspect all explosion-protected equipment in accordance with the applicable code of practice.

Figure 2 - Pipe Mounting

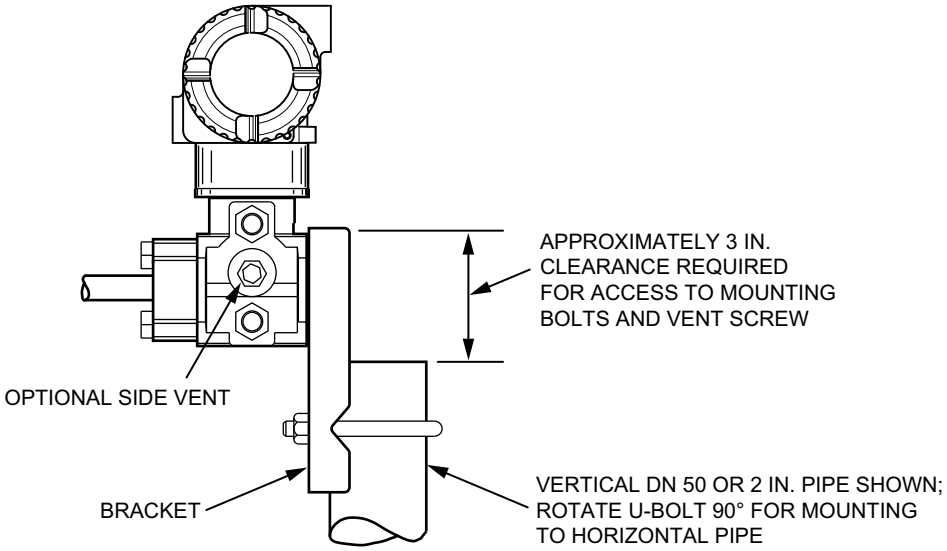

Figure 3 - Surface Mounting

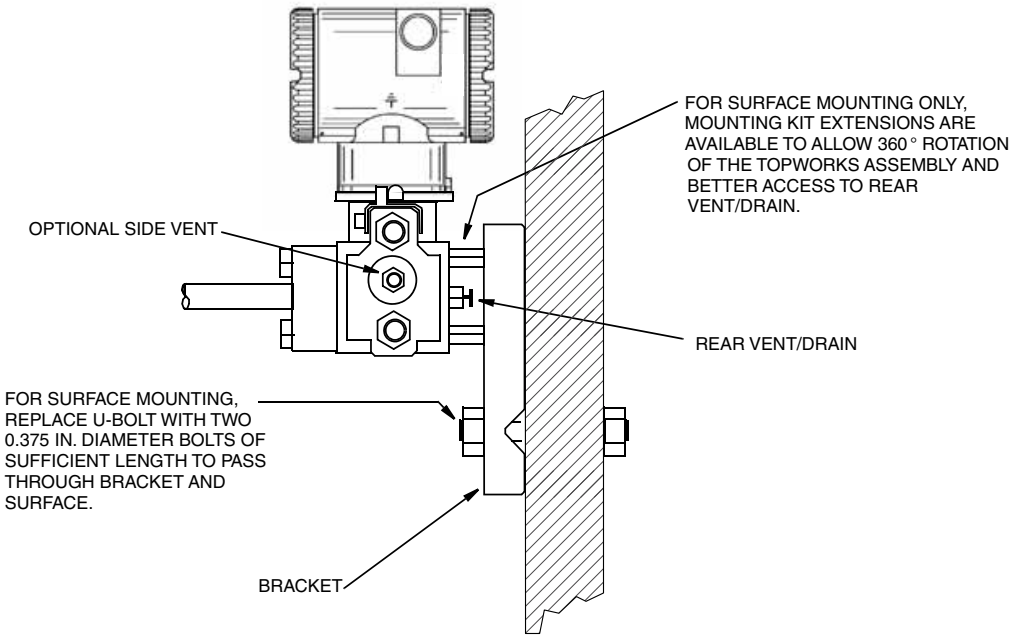

Figure 4 - Direct Connected AP and GP Transmitter Mounting

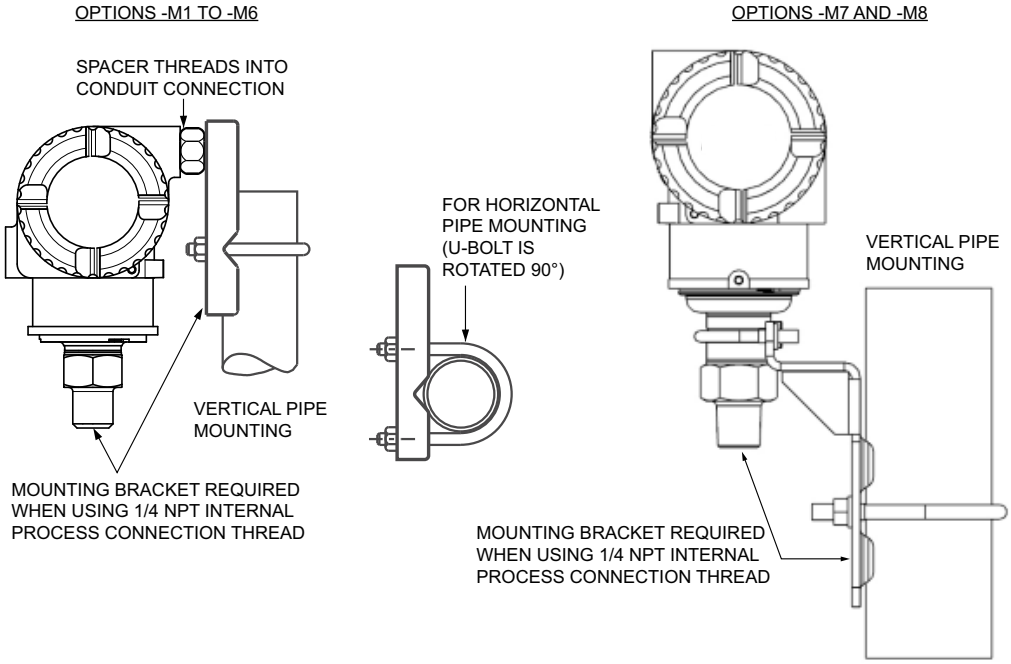

Figure 5 - Process Mounting of a DP Transmitter Supported by Process Piping

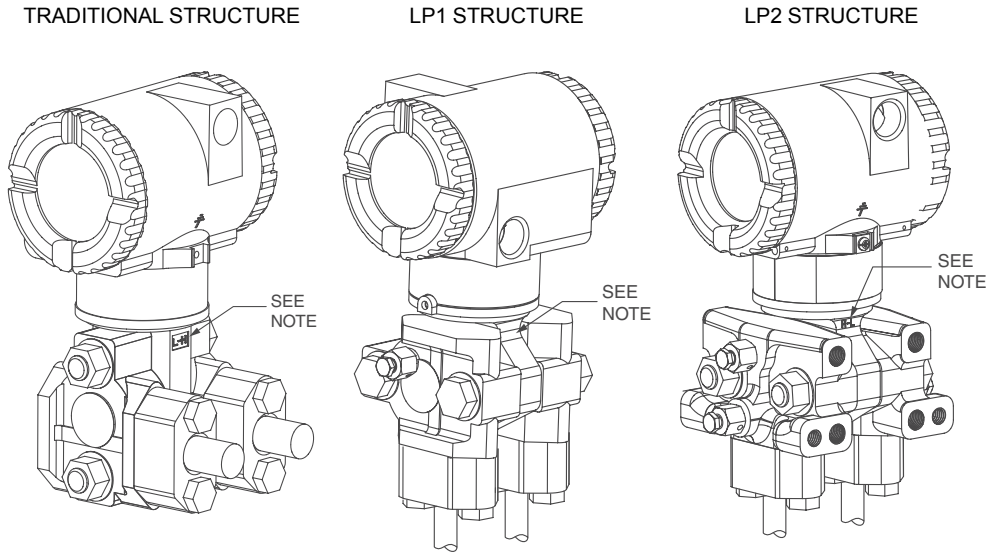

NOTE: MARK INDICATING LOW AND HIGH PRESSURE SIDES OF TRANSMITTER

Sanitary Process Connections

Transmitters with a sanitary process connector employ a Tri-Clamp type connection or a mini tank spud seal. Install the transmitter as shown.

For dimensional information, refer to the following documents:

- Tri-Clamp Type Connectors: DP 020-218
- Mini Tank Spud Connectors: DP 020-219

Figure 6 - Mounting a Transmitter with a Sanitary Tri-Clamp Type Connection

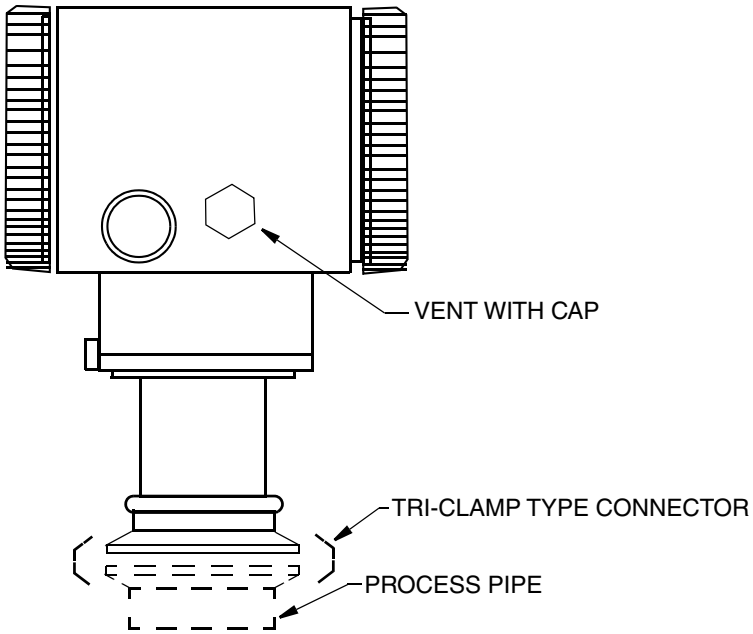

Figure 7 - Mounting a Transmitter with a Sanitary Mini Tank Spud Seal

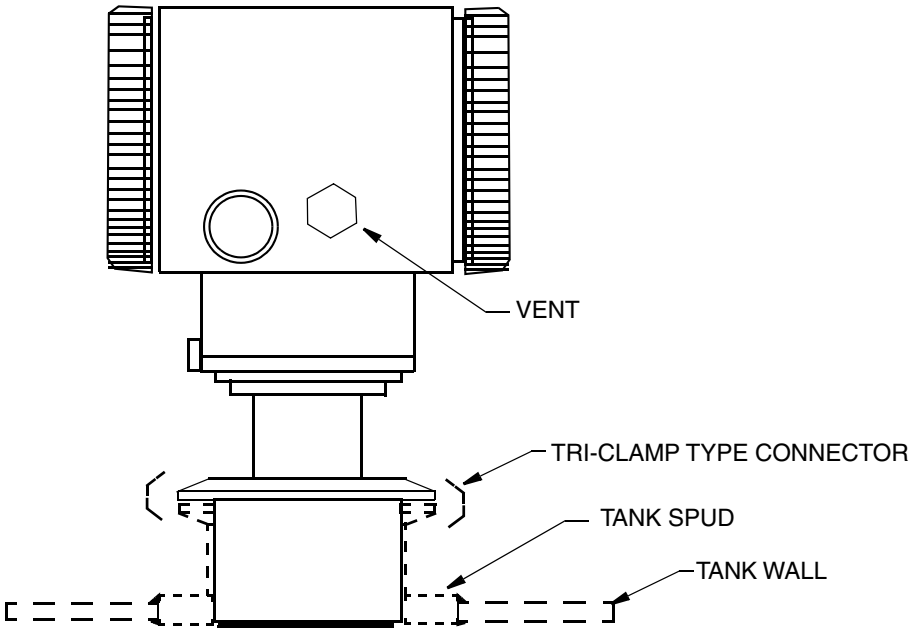

- If the transmitter is to be mounted horizontally (side of a tank), orient the housing so that the vent is self-draining. **Do not mount the vent facing up.**
- If the vent faces downward, remove the protective cap.
- If the vent clogs, replace it with Part Number D0186DQ (W.L.Gore part number PMF200444). Stock vents and replace them at a predetermined interval as part of preventive maintenance. When installing a new vent, apply torque of 0.6 to 0.8 N-m (5 to 7 lbf-in).
- If the transmitter is subject to routine washdown such as in typical sanitary applications and the vent is oriented so that it is self-draining, the vent will stay clear, and longer intervals between preventive maintenance may be realized.
- If the vent becomes clogged, the resulting pressure measurement error may be as much as 1.5 inH2O per degree C change in temperature. This value is positive with decreasing temperature, and negative with increasing temperature.

Welding the Tank Spud

Weld the tank spud into a hole cut in the tank as follows:

1. Cut a hole into the process vessel to accept the spud. The spud should fit snugly and uniformly. The nominal diameter of the spud is 3.73 inch (94.7 mm). To assure that the seal is always covered by process fluid, the top of the hole should be below the minimum measurement level.
2. Position the spud mounting ring so that it aligns as closely as possible with the inside wall of the tank, and the weep hole is at the bottom.
3. Tack weld the spud mounting ring to the outside of the tank in four places.
4. Weld the spud mounting ring to the inner surface of the tank:
   a. Spud is 316 stainless steel. Use a compatible welding rod. Do not distort the spud mounting ring by using excessive heat.
   b. Weld the spud mounting ring in sections as indicated in the diagram.
   c. After each section is welded, cool right away with water until the temperature is less than 370°C (700°F) before welding the next section.
5. Grind the weld smooth so the surface is free from irregularities where dirt can lodge.

6. After completing the inner weld, the outer surface can also be welded if desired.

Figure 8 - Welding Procedure

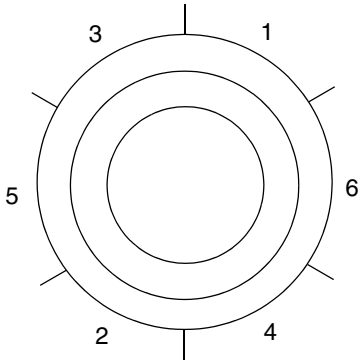

Pulp and Paper Process Connections

Transmitters with pulp and paper process connectors are available in two designs — sleeve type and threaded type. For dimensional information, refer to DP 020-217.

Sleeve-Type Connectors

1. Cut a hole into the process vessel to accept the weld spud. The spud should fit snugly and uniformly. The nominal diameter of the spud is:
   - Nominal 1 inch connector: 33.4 mm (1.32 inch)
   - Nominal 1 1/2 inch connector: 48.3 mm (1.90 inch)
2. Position the sleeve into the hole so that it aligns as closely as possible with the inside wall of the vessel.
3. Tack weld using the welding sequence shown in *Welding Procedure, page 27*. Cool each section with water until the temperature is below 370°C (700°F) before proceeding to the next section.
4. Weld the circumference of the sleeve using a compatible stainless steel welding rod.

   NOTE: The welder should meet the requirements of ANSI B31.3, ASME Section IX, or other codes, if applicable.
5. Lubricate the o-ring with appropriate lubricant and install it into the sleeve, ensuring that it is properly seated.

   NOTE: If the gasket is not properly seated, a process leak may occur.
6. Insert the transmitter sensor into the sleeve and hold it in place with cap screws.

Figure 9 - Mounting a Transmitter with a Sleeve-Type Pulp and Paper Process Connection

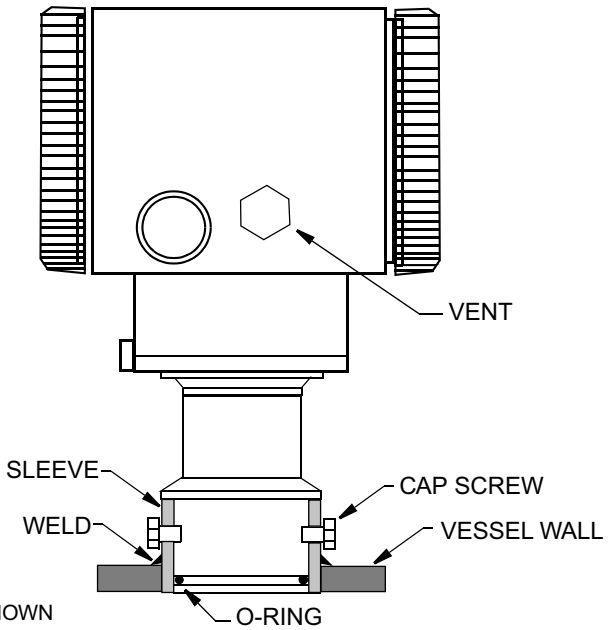

1 1/2 INCH SIZE SHOWN

Threaded-Type Connectors

1. Cut a hole into the process vessel to accept the weld spud. The spud should fit snugly and uniformly. The nominal diameter of the spud is:
   - Nominal 1 inch connector: 38.1 mm (1.50 inch)
   - Nominal 1 1/2 inch connector: 60.3 mm (2.38 inch)
   - Nominal 1 1/2 inch connector for Ametek spud: 50.5 mm (1.99 inch)
2. Position the connector into the hole so that it aligns as closely as possible with the inside wall of the vessel.
3. Tack weld using the welding sequence shown in *Welding Procedure, page 27*. Cool each section with water until the temperature is below 370°C (700°F) before proceeding to the next section.

   NOTE: Use a heat sink during this operation.
   - 1 inch size: Part Number N1214YS
   - 1 1/2 inch size: Part Number N1214YR
4. Weld the circumference of the connector using a compatible stainless steel welding rod.

   NOTE: The welder should meet the requirements of ANSI B31.3, ASME Section IX, or other codes, if applicable.
5. After the connector has cooled, remove the heat sink.
6. Lubricate the gasket with an appropriate lubricant and install it into the connector, ensuring that it is properly seated.

   NOTE: If the gasket is not properly seated, a process leak may occur.
7. Thread the sensor into the connector hand-tight. Then tighten approximately 1/8 turn more.

Figure 10 - Mounting a Transmitter with a Threaded-Type Pulp and Paper Process Connection

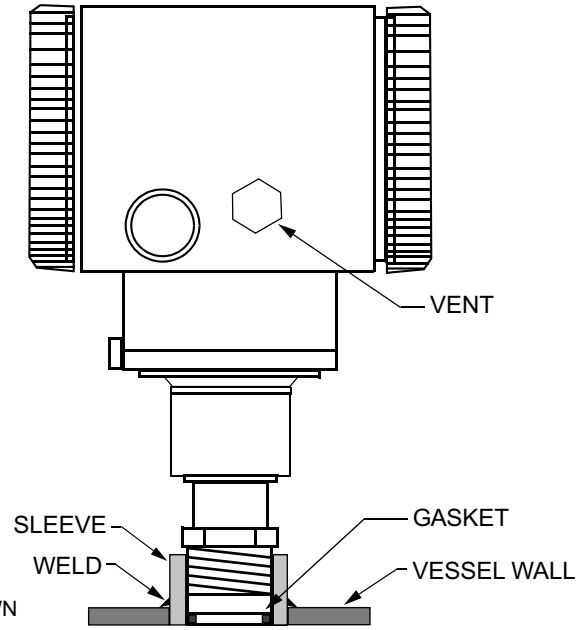

Manifold Mounting of Differential Pressure Transmitters

With manifold mounting, the transmitter is mounted to and supported by a bypass manifold. The bypass manifold can be mounted to a DN 50 or 2 inch pipe with an optional mounting bracket. See MI 022-138.

Figure 11 - Typical Mounting of a DP Transmitter Supported by a Bypass Manifold

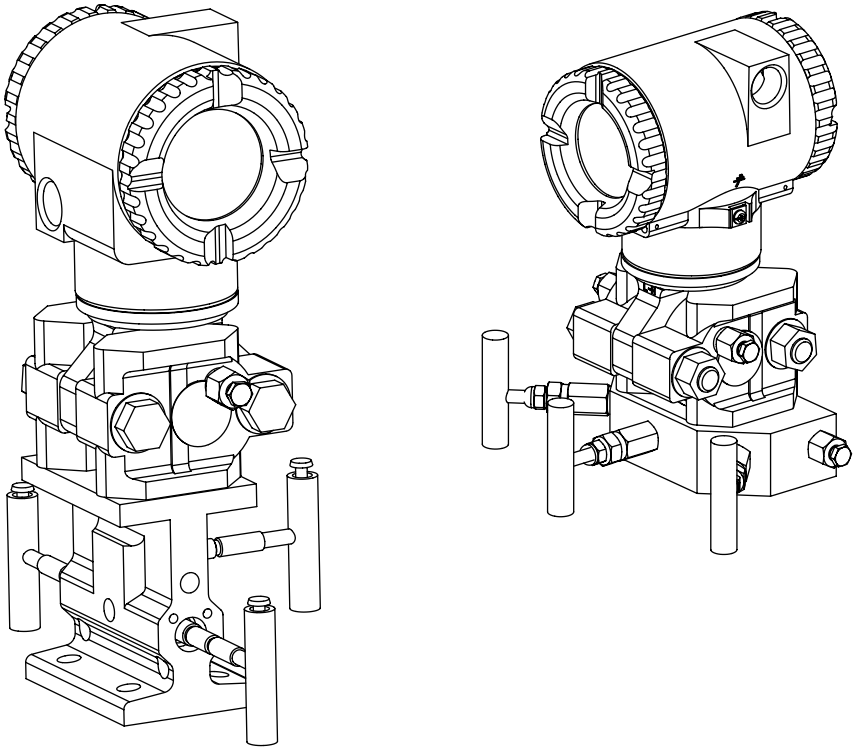

M4A MANIFOLD MB3 MANIFOLD

Figure 12 - Typical Mounting of a DP Transmitter on a Coplanar™ Manifold

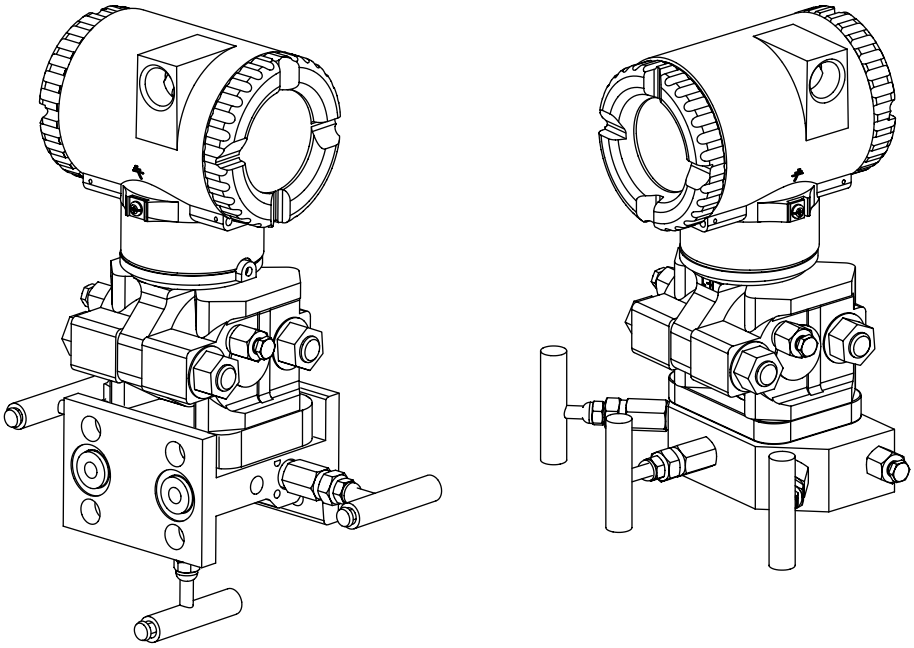

Mounting a Differential Pressure Transmitter Using a Bracket

To mount a DP transmitter to a pipe or surface, use the Standard Mounting Bracket Set (Model Code Option -M1 or -M2), or the Universal Bracket Mounting Set (Model Code Option -M3).

Standard Mounting Bracket

A DP transmitter with either traditional or LP2 low profile structure can be mounted to a vertical or horizontal DN 50 or 2 in pipe using a standard bracket. See the following figures for details and examples.

Secure the mounting bracket to the transmitter using the four screws provided. Mount the bracket to the pipe. The mounting bracket can also be used for wall mounting by securing the bracket to a wall using the U-bolt mounting holes.

Figure 13 - Pipe or Surface Mounted DP Transmitter Using a Standard Bracket

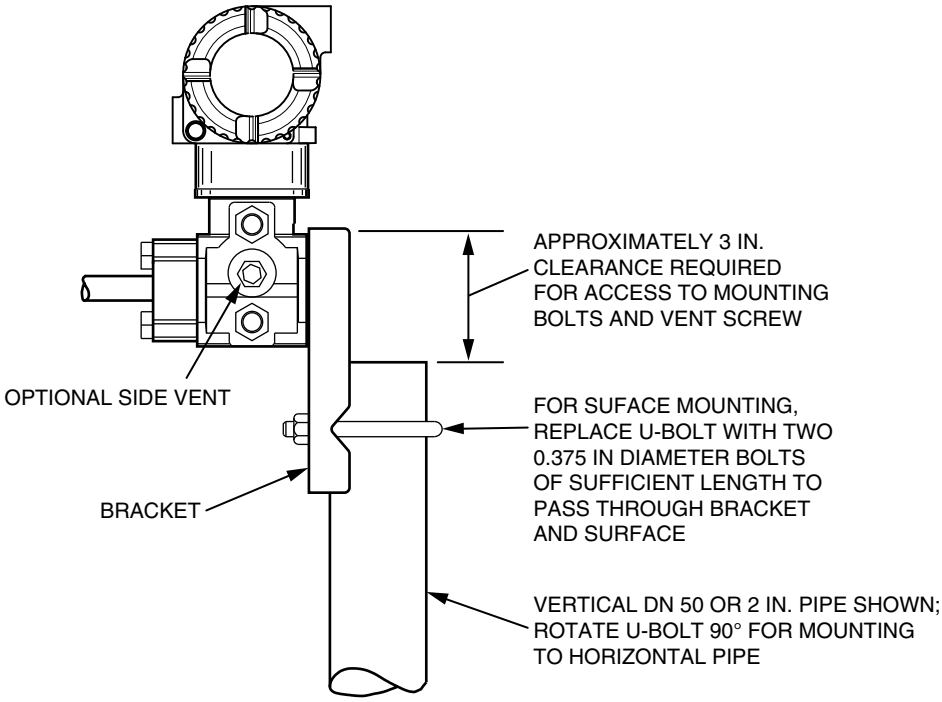

Figure 14 - Examples of DP Transmitters Mounted with a Standard Bracket

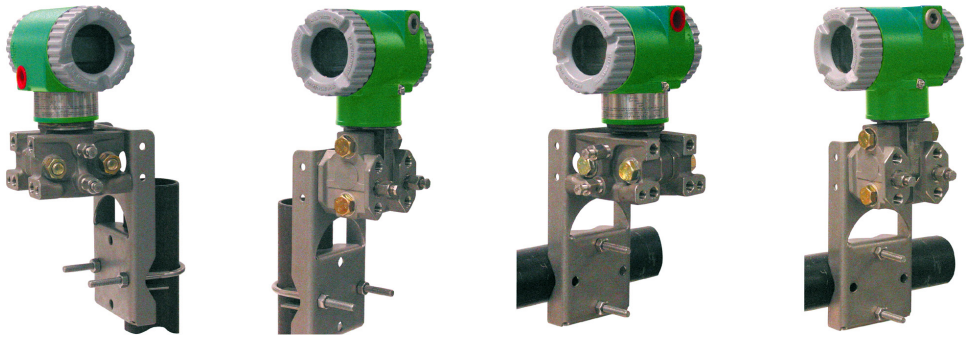

Universal Mounting Bracket

A DP transmitter with either traditional or LP2 low profile structure can be mounted in a myriad of positions to a vertical or horizontal DN 50 or 2 in pipe using a universal bracket. See the following figures for details and examples.

Secure the mounting bracket to the transmitter using the two long or four short screws provided. Mount the bracket to the pipe. The mounting bracket can also be used for wall mounting by securing the bracket to a wall using the U-bolt mounting holes.

Figure 15 - Universal Bracket Detail

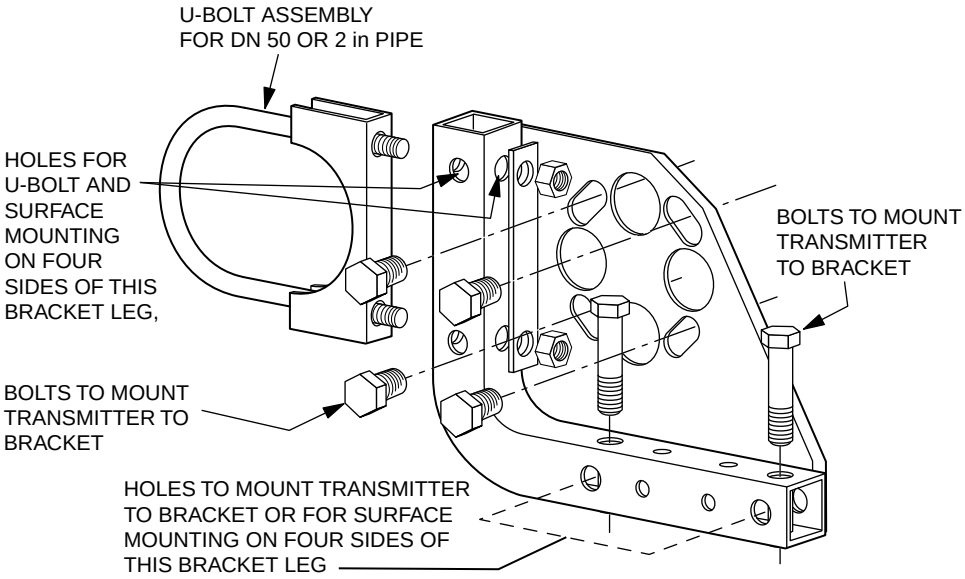

Figure 16 - Mounting a Traditional Structure DP Transmitter with a Universal Bracket

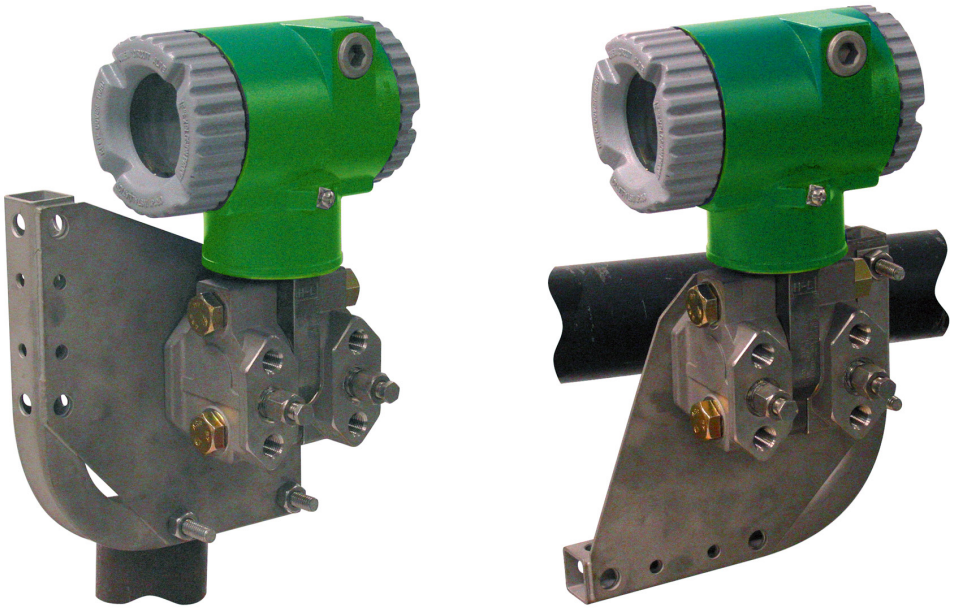

Figure 17 - Mounting a LP2 Structure DP Transmitter to a Vertical Pipe with a Universal Bracket

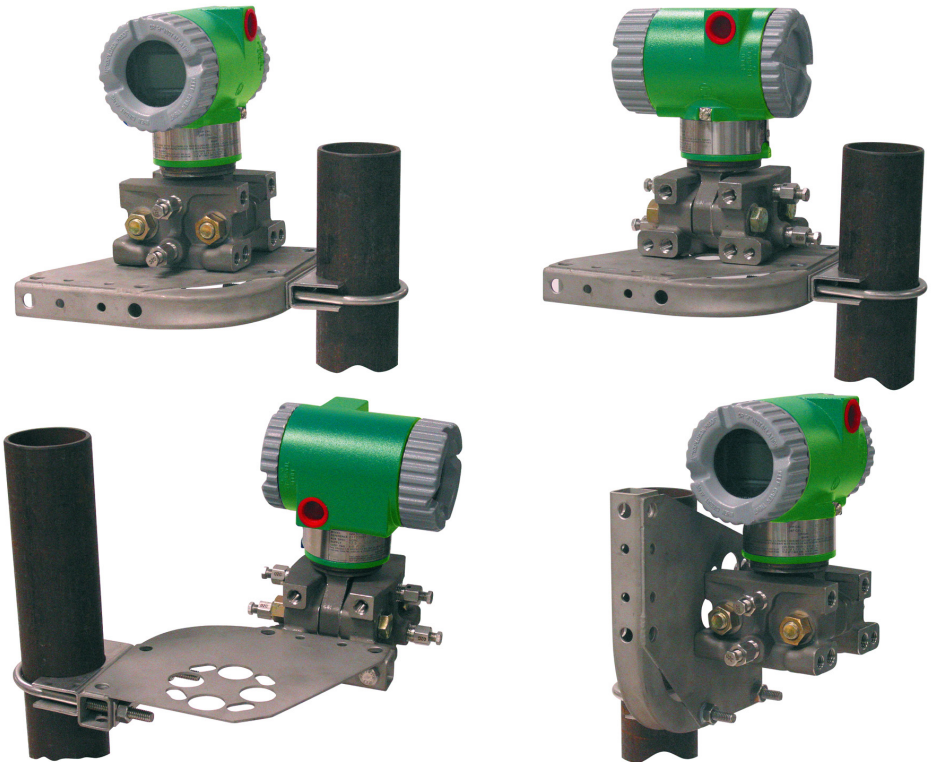

Figure 18 - Mounting a LP2 Structure DP Transmitter to a Horizontal Pipe with a Universal Bracket

Typical Piping for Absolute and Gauge Pressure Transmitters

Piping for Direct Connect AP and GP Transmitters

The next figure shows a typical piping application for direct connected transmitters. Calibration supply pressure can be applied via a calibration screw. The lower conduit port can be used as a drain for moisture buildup in terminal compartment.

NOTE:

- The use of snubbers is recommended in installations that are prone to high levels of fluid pulsations.
- Pressure transmitters mounted directly to process piping or a pressure vessel may require the use of a shutoff valve (shown) to comply with the requirements of ASME Power Piping Code B31.1 and Chemical and Petroleum Piping Code B31.3.

Figure 19 - Typical Direct Connect Transmitter Piping

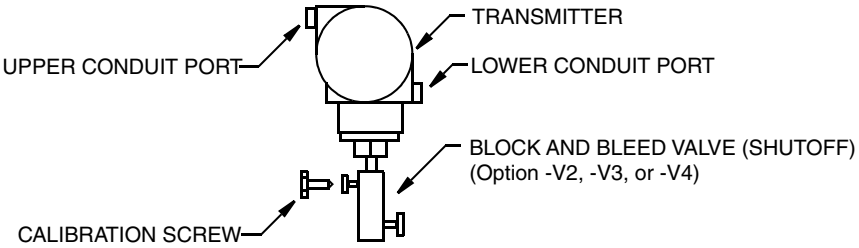

- Block and bleed valve maximum pressure:

  40 MPa (6,000 psi) at 38°C (100°F)

  25 MPa (4,000 psi) at 250°C (400°F)
- Calibration screw maximum pressure

  0.7 MPa (100 psi) with Poly-Flo fitting (F0101ES)

For hot process applications greater than the operative limits of your transmitter[35] — such as steam — additional piping is required to help protect the transmitter from the hot process as shown in the diagram. The piping is filled with water or process fluid. Mount the transmitter below the pressure connection at the pipe.

Although the transmitter is shown mounted vertically, you can also mount it horizontally unless sediment is present. The calibration tee is not required if a calibration screw is used for field calibrations.

If trapped vapor pockets cannot be tolerated in a liquid service and a horizontal process connection is used, install a pipe elbow and vertically position the transmitter with the housing *below* the process connection.

35. 121°C (250°F) for silicone fill fluid, or 82°C (180°F) for Fluorinert fill fluid

Figure 20 - Hot Process Piping for Direct Connect Transmitters

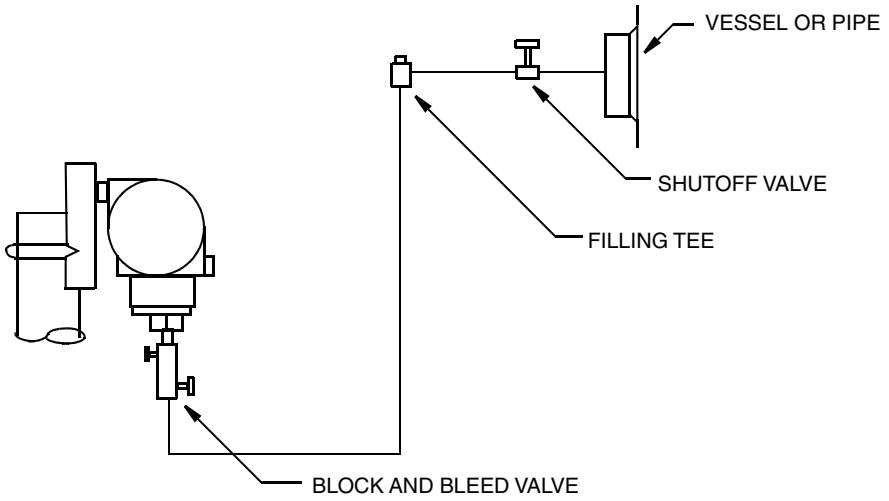

Piping for Biplanar AP and GP Transmitters

The next figure shows a typical piping application for biplanar transmitters.

Figure 21 - Typical Biplanar Transmitter Piping

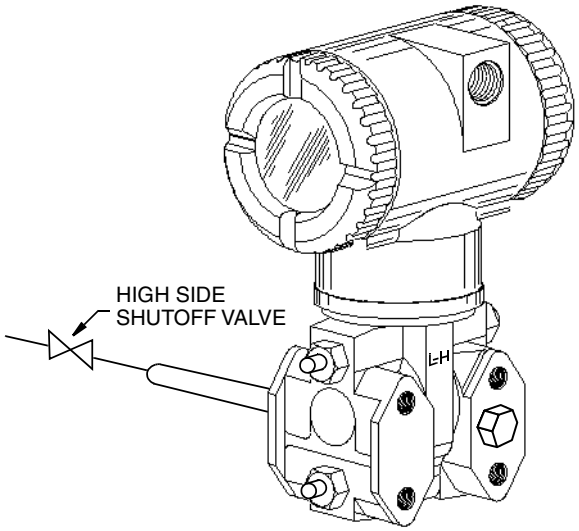

To achieve pressure-tight joints, tighten NPT thread one-half to three turns past hand-tight.

Tighten bolts, plugs, and screws to approximately the following torque values:

- Process connector bolts: 61 N-m (45 lbf-ft)
- Drain plugs: 47 N-m (35 lbf-ft)
- Vent and drain screws: 6.8 N-m (5 lbf-ft)

NOTE: The use of snubbers is recommended in installations that are prone to high levels of fluid pulsations.

For hot process applications greater than the operative limits of your transmitter[36] — such as steam — additional piping is required to help protect the transmitter from the hot process as shown in the diagram. The piping is filled with water or process fluid. Mount the transmitter below the pressure connection at the pipe.

36. 121°C (250°F) for silicone fill fluid, or 82°C (180°F) for Fluorinert fill fluid.

Although the transmitter is shown mounted vertically, you can also mount it horizontally unless sediment is present. The calibration tee is not required if a calibration screw is used for field calibrations.

If trapped vapor pockets cannot be tolerated in a liquid service and a horizontal process connection is used, install a pipe elbow and vertically position the transmitter with the housing *below* the process connection.

Figure 22 - Hot Process Piping for Biplanar Transmitters

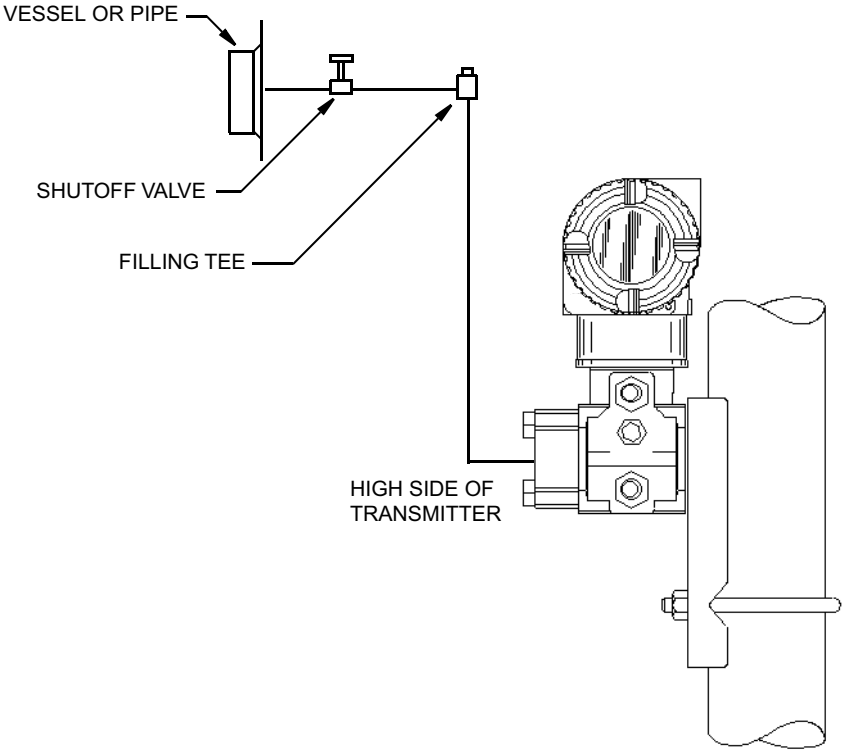

Additional Steps for Differential Pressure Transmitter Installation

Venting and Draining

Traditional Structure

Sensor cavity venting and draining is provided for both vertical and horizontal mounting.

- For vertically mounted units, draining is via a vent and drain screw. Venting is possible with side vents (option -V).
- For horizontally mounted units, the unit is self-draining. Venting is via a vent and drain screw.

Figure 23 - Vertical Mounting — Cavity Draining

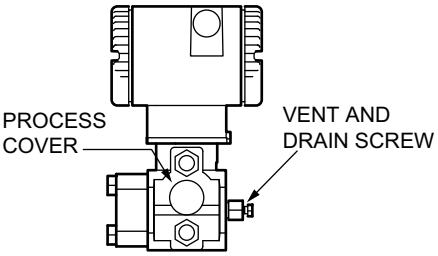

Figure 24 - Vertical Mounting — Cavity Venting

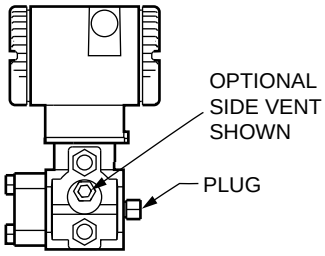

Figure 25 - Horizontal Mounting — Cavity Venting

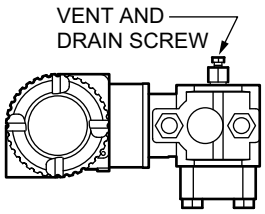

LP1 Low Profile Structure

Sensor cavity venting and draining is provided for both vertical and horizontal mounting.

- For vertically mounted units, the transmitter is self-draining. Venting is via a vent and drain screw.
- For horizontally mounted units, the transmitter can simply be turned over (rotated 180 degrees) to orient the high and low pressure sides in the preferred locations. There is no need to unbolt the process covers.

If the transmitter is connected with a length of impulse piping, such piping should slope up to the transmitter for gas applications, or down for liquid applications.

Figure 26 - Vertical Mounting — Cavity Venting

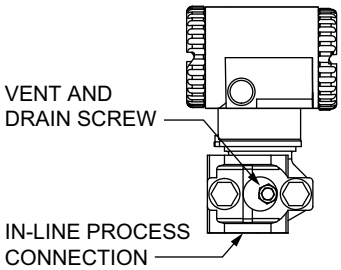

Figure 27 - Horizontal Mounting — Cavity Venting and Draining

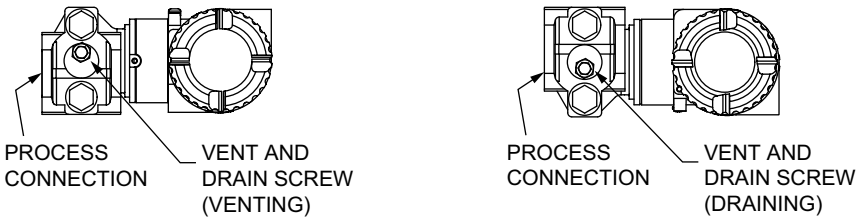

LP2 Low Profile Structure

The LP2 low profile structure has a full-featured vent and drain design with separate vent and drain screws positioned in each cover for complete venting and draining from the sensor cavity.

Figure 28 - Cavity Venting and Draining

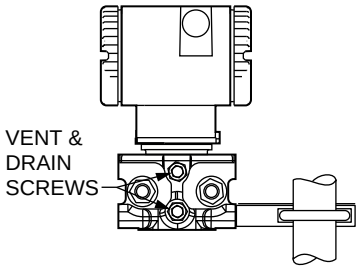

Installation of Flow Measurement Piping

Refer to the diagrams for typical installations with horizontal and vertical process pipes.

The transmitters are shown below the level of the pressure connections at the pipe (usual arrangement, except for gas flow without a seal liquid), and with filling tees in the lines to the transmitter (for a seal liquid).

If the process fluid being measured must not come into contact with the transmitter, the transmitter lines must be filled with a suitable seal liquid as described in *Filling the System with Seal Liquid, page 41*. In such a case, mount the transmitter below the level of the pressure connections at the pipe. With steam flow, the lines are filled with water to protect the transmitter from the hot steam. The seal liquid (or water) is added to the lines through the filling tees. To prevent unequal heads on the transmitter, the tees must be at the same elevation, and the transmitter must be mounted vertically as shown. If a seal liquid is not required, elbows can be used in place of the tees.

Tighten drain plugs and optional vent screws to 20 N-m (15 lbf-ft). Tighten the four process connector bolts to a torque of 61 N-m (45 lbf-ft).

The low and high pressure sides of the transmitter are identified by an L-H marking on the side of the sensor above the label.

With medium viscosity seal liquids and/or long transmitter lines, use larger valve sizes.

- With a **horizontal** line, pressure connections at the pipe should be at the side of the line. However, with gas flow without a seal liquid, connections should be at the top of the line.
- With a **vertical** line, flow should be upwards.
- For **liquid** or **steam** flow, the transmitter should be mounted lower than the pressure connections at the pipe.
- For **gas** flow *without* a seal liquid, the transmitter should be mounted higher than the pressure connections at the pipe.
- For **gas** flow *with* a seal liquid, the transmitter should be mounted lower than the pressure connections.
- It is recommended to use snubbers in installations prone to high levels of fluid pulsations.

Figure 29 - Example of Horizontal Process Line Installation

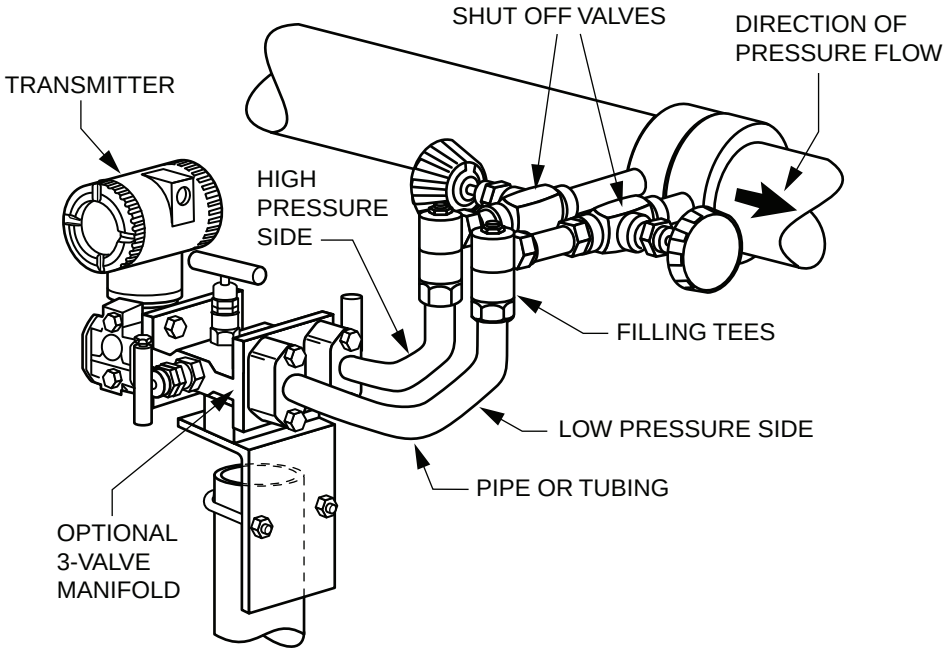

Figure 30 - Example of Vertical Process Line Installation

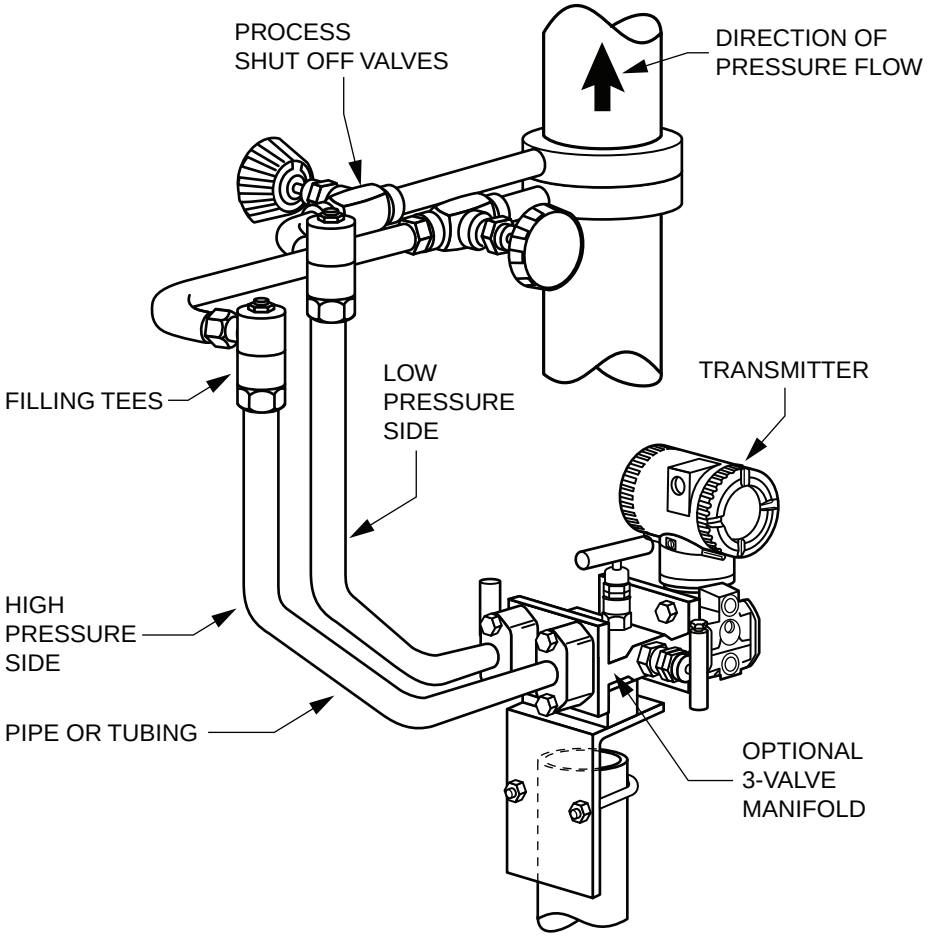

Filling the System with Seal Liquid

If the process fluid being measured must not come into contact with the transmitter, the transmitter lines must be filled with a suitable seal liquid as follows:

NOTICE

POTENTIAL EQUIPMENT DAMAGE AND PROCESS FLUID CONTAMINATION

To help prevent loss of seal liquid and contamination of process fluid, never open both process shutoff valves and manifold shutoff valves if the bypass valve is open.

Failure to follow these instructions can result in equipment damage and process fluid contamination.

1. If the transmitter is in service, follow the procedure in *Taking a Differential Pressure Transmitter out of Operation, page 50*.
2. Close both process shutoff valves.
3. Open all three valves on the 3-valve manifold.
4. Partially open the vent screws on the transmitter until all air has been forced out of the transmitter body and lines. Close the vent screws.
5. Refill the tee connections. Replace the plugs and close the bypass valve. Check for leaks.
6. Follow the procedure in *Putting a Differential Pressure Transmitter into Operation, page 49*.

Positioning the Housing

The transmitter housing (topworks) can be rotated up to one full turn in the counterclockwise direction when viewed from above for optimum access to adjustments, display, or conduit connections. The housing has a retention clip that keeps the housing from being rotated beyond a safe depth of housing/sensor thread engagement.

NOTICE

POTENTIAL VIBRATION EFFECTS

If you remove the housing for maintenance, do not over-tighten it upon reassembly. Hand-tighten it to the bottom of the threads, then back off a half-turn counterclockwise to avoid bottoming out the housing to the sensor.

Failure to follow these instructions can result in amplified vibration effects.

Figure 31 - Housing Clip Location

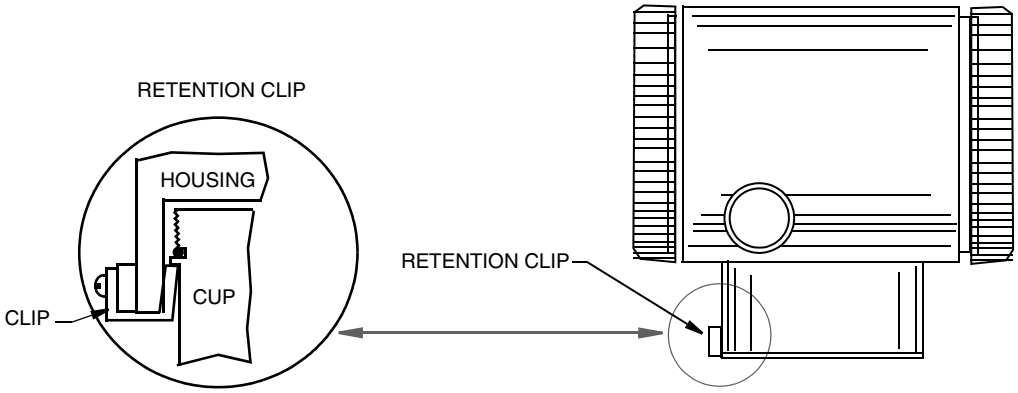

Positioning the Display

The optional display can be rotated within the housing at 90° increments to any of four positions. To do this, grasp the two tabs on the display and rotate it about 10° in a counterclockwise direction. Pull out the display. Ensure that the o-ring is fully seated in its groove in the display housing. Turn the display to the desired position, reinsert it in the electronics module, aligning the tabs on the sides of the assembly, and twist it in the clockwise direction.

NOTICE

POTENTIAL EQUIPMENT DAMAGE

Do not turn the display more than 180° in any direction. Doing so can damage its connecting cable.

Failure to follow these instructions can result in equipment damage.

Setting the Write Protect Jumper

Your transmitter has write protection capability. This means that the external zero, local display, and remote communications can be prevented from making changes to the static or nonvolatile database in the function block application of the resource. Enable write protection by moving a jumper that is located in the electronics compartment behind the optional display.

To activate write protection, remove the display as described in *Positioning the Display, page 42*, then remove the jumper or move it to the lower position as shown on the exposed label. Replace the display.

When configuring the transmitter, select the **Hard W Lock** option in the **FEATURE_ SEL** parameter in the Resource Block. For more information on write protection in FOUNDATION Fieldbus devices, see MI 014-900.

Figure 32 - Write Protect Jumper

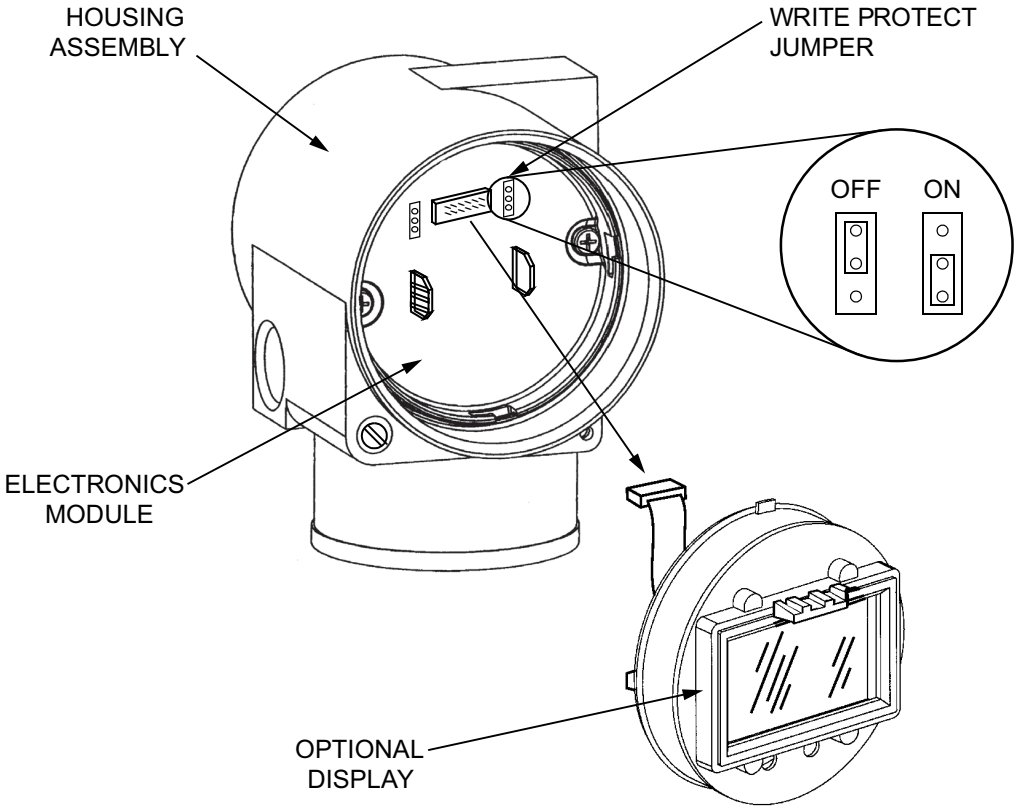

Setting the Simulate Jumper

Your transmitter has simulation capability, which means that you can test the transmitter in a simulation mode.

Simulation mode can be enabled or disabled by moving a jumper that is located in the electronics compartment behind the optional display. After removing the housing cover and the optional local display, move the simulation jumper to the top (On) position to activate simulation mode, or move the jumper to the lower (Off) position to disable simulation mode. Refer to *Simulation Mode, page 101* for additional information.

Figure 33 - Simulate Jumper

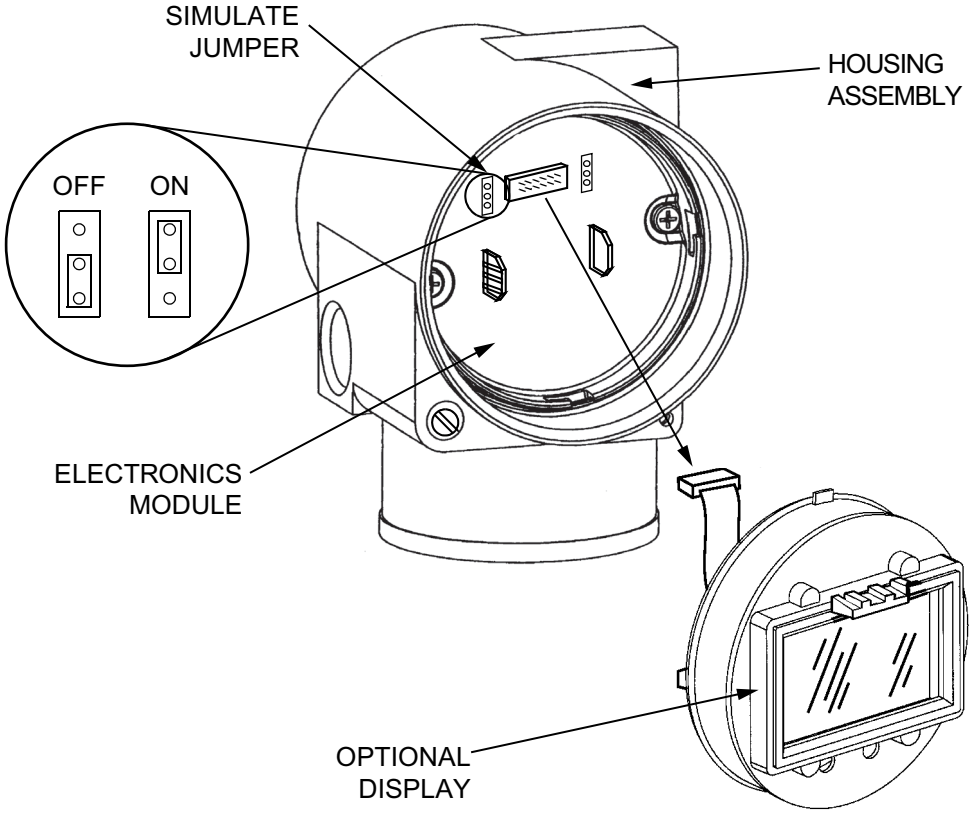

Cover Locks

Housing cover locks are provided as standard with certain agency certifications and as part of the Custody Transfer Lock and Seal option. To lock the covers, unscrew the locking pin until approximately 6 mm (0.25 in) shows, lining up the hole in the pin with the hole in the housing. Insert the seal wire through the two holes, slide the seal onto the wire ends, and crimp the seal.

Figure 34 - Cover Lock Location

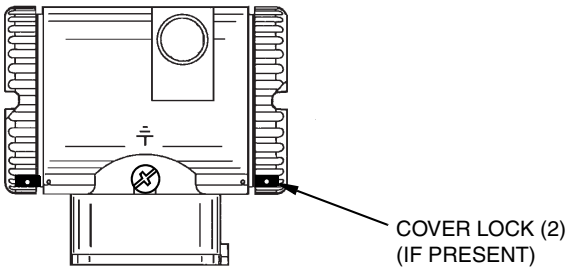

Wiring

The installation and wiring of your transmitter must conform to local code requirements.

⚠ WARNING

EXPLOSION HAZARD

ATEX requires that when equipment is intended to be used in an explosive atmosphere caused by the presence of combustible dust, cable entry devices and blanking elements must provide a degree of ingress protection of at least IP6X. They must be suitable for the conditions of use and correctly installed.

Failure to follow these instructions can result in death, serious injury, or equipment damage.

NOTE: Use transient/surge protection in installations prone to high levels of electrical transients and surges.

Accessing Transmitter Field Terminals

For access to the field terminals, thread the cover lock (if present) into the housing to clear the threaded cover, and remove the cover from the field terminals compartment as shown.

Figure 35 - Accessing Field Terminals

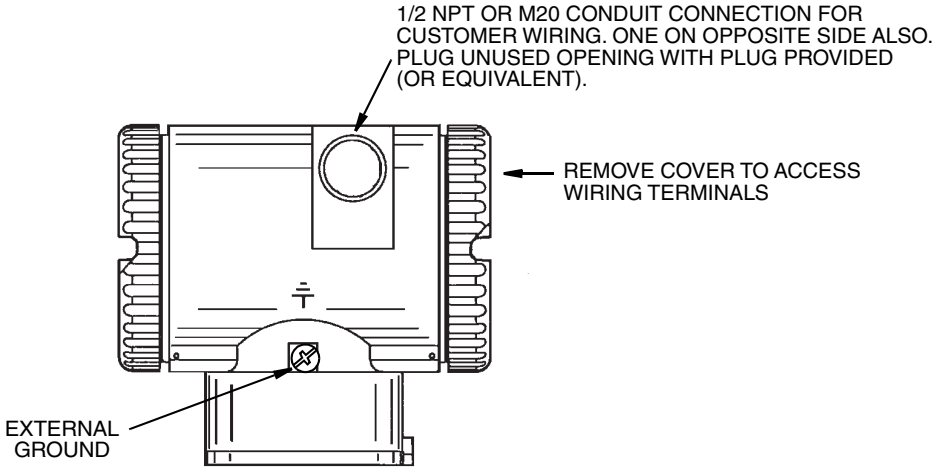

Figure 36 - Identification of Field Terminals

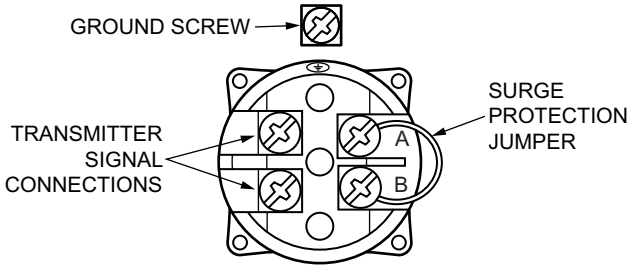

Wiring Notes

- Do not run transmitter wires in the same conduit as mains (ac power) wires.
- Use FOUNDATION Fieldbus approved cable (multi-core, shielded, twisted-pair cable) to help protect remote communications from electrical noise. Refer to MI 020-360 or FOUNDATION Fieldbus Application Guide AG-140, Rev 1.0 or later.
- The transmitter is polarity independent and therefore cannot be wired incorrectly.
- The power supply (a FOUNDATION Fieldbus Power Supply Module) must be capable of providing at least 17 mA for each transmitter connected.
- Voltage requirements are summarized in the following table.

Minimum Supply Voltage	9 V dc
Recommended Supply Voltage	24 V dc
Maximum Supply Voltage	32 V dc

- Review suggested wiring practices as described in MI 020-360 to help ensure proper communications capability and to minimize the effects of RFI.
- Refer to the diagram for an example of wiring for a typical transmitter installation.

Figure 37 - Wiring of a Typical FOUNDATION Fieldbus Transmitter Installation

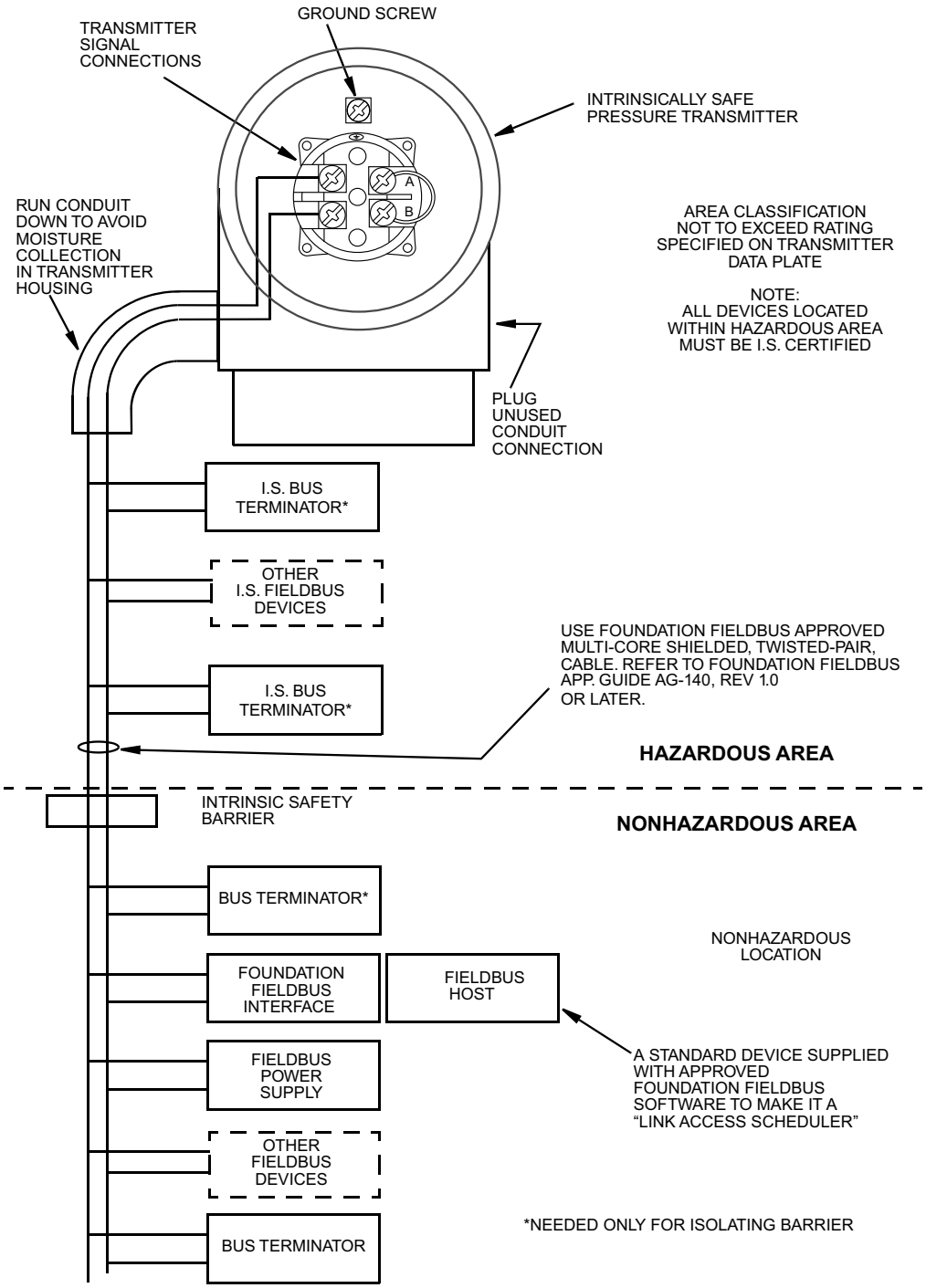

Wiring the Transmitter

Transmitters with a digital output signal connect to a FOUNDATION Fieldbus host or a distributed control system (DCS) through the fieldbus. The maximum recommended length for field wire is 1800 m (6000 ft). Transmitter power is supplied by a FOUNDATION Fieldbus power supply module.

This procedure identifies wire terminations in the transmitter. For other system wiring details, refer to the installation instructions provided with the DCS. Use the following procedure to wire the transmitter:

1. Remove the cover from the transmitter field terminal compartment.

2. Run signal wires (0.50 mm^2 or 18 AWG, typical) through one of the transmitter conduit connections. Use shielded, twisted-pair cable to help protect the digital output and/or remote communications from electrical noise.

   NOTE: Do not run transmitter wires in the same conduit as the mains (ac power) wires.

3. Plug the unused conduit connection.

⚠⚠ WARNING

EXPLOSION HAZARD

To help prevent possible explosions and to maintain flameproof, explosionproof, and dust-ignitionproof protection, observe applicable wiring practices. Plug the unused conduit openings with approved conduit plugs. Both plug and conduit must engage a minimum of five full threads for 1/2 NPT connections; seven full threads for M20 connections.

Failure to follow these instructions can result in death or serious injury.

4. Connect a ground wire to the ground terminal in accordance with local practice.

NOTICE

POTENTIAL REDUCED PERFORMANCE OR EQUIPMENT DAMAGE

If the signal circuit must be grounded, it is preferable to ground it at the negative terminal of the dc power supply. To avoid errors resulting from ground loops or the possibility of short-circuiting groups of instruments in a loop, there should be only one ground in a loop.

Failure to follow these instructions can result in reduced performance or equipment damage.

5. Connect the FOUNDATION Fieldbus bus to the two terminals on the terminal block in the field terminal compartment.

NOTICE

POTENTIAL PROCESS DISRUPTION

When attaching the transmitter to a running process, it is recommended that the transmitter not have an address configured.

Failure to follow these instructions can result in disruption to the process.

6. Reinstall the cover onto the housing by rotating it clockwise to seat the o-ring into the housing, then continue to hand-tighten until the cover contacts the housing metal-to-metal. If cover locks are present, lock the cover as described in *Cover Locks, page 45*.

Installing the FOUNDATION Fieldbus Support Files

Descriptor files used by a FOUNDATION Fieldbus configurator (host) can be found on our website or the FOUNDATION Fieldbus website. The files included are:

Table 10 - Fieldbus Descriptor Files

Filename	Description
<xxyy>.ffo	DD binary file (DD4)
<xxyy>.sym	DD symbol file (DD4)
<xxyy>.ff5	DD binary file (DD5)
<xxyy>.sy5	DD symbol file (DD5)
<xxbbzz>.cff	Capability file

Where:

- xx=01 (device revision; parameter 12 in Resource Block)
- yy=01 (DD revision; parameter 13 in Resource Block)
- bb may be the same as yy
- zz=01 (cff rev)

Set up the following directory structure for the device description (DD) files of a device on the host computer. According to the FOUNDATION specification, the DD files must be present in the appropriate directories as described below.

```
ManufacturerID
└─ DeviceType
   ├─ DeviceRevDDRev.ffo (DD4)
   ├─ DeviceRevDDRev.ff5 (DD5)
   ├─ DeviceRevDDRev.sym (DD4)
   ├─ DeviceRevDDRev.sy5 (DD5)
   ├─ DeviceRev<bb>CFFRev.cff (DD5 and DD4)
   └─ Schneider_Electric_Systems_USA_Inc_.Absolute_and_
      Differential_and_Gauge_Pressure_Transmitter.fdix
```

where *.ffo or *.ff5 is the DD binary file, *.sym or *.sy5 is the symbol file, and bb may be the same as the Device Revision, or may be a different number.

The Manufacturer ID is 385884, and the Device Type for this pressure transmitter is BA40.

NOTE:

- The applicable DD and capability files are also available at *http://www.fieldcommgroup.org*.
- In this document, parameter values are given in hex format.

Putting a Differential Pressure Transmitter into Operation

This procedure explains how to sequence the valves in your flow measurement piping or optional bypass manifold to help ensure that your transmitter is not overranged and that seal liquid is not lost. Refer to the diagrams in *Installation of Flow Measurement Piping, page 39*.

NOTE: This procedure assumes that the process shutoff valves are open.

1. Make sure that both upstream and downstream manifold valves are closed.
2. Make sure that the bypass valve is open.
3. After installing the transmitter, slowly open the upstream manifold valve.
4. Close the bypass valve.
5. Slowly open the downstream manifold valve.

Taking a Differential Pressure Transmitter out of Operation

This procedure explains how to sequence the valves in your flow measurement piping or optional bypass manifold to help ensure that your transmitter is not overranged and that seal liquid is not lost. Refer to the diagrams in *Installation of Flow Measurement Piping, page 39*.

NOTE: This procedure assumes that the process shutoff valves are open.

1. Close the downstream manifold valve.
2. Close the upstream manifold valve.
3. Open the bypass valve.
4. Carefully open the vent screw to release any residual pressure before disconnecting lines.

⚠ WARNING

RISK OF EXPOSURE

When venting pressure from the transmitter, wear suitable protective equipment to prevent possible injury from process material, temperature, or pressure.

Failure to follow these instructions can result in death or serious injury.

5. Remove the transmitter, if applicable.

Operation with the Local Display

The local display provides local indication of measurement information on two lines. The upper line displays five digits (four digits when a minus sign is needed); the lower line displays seven alphanumeric characters.

During normal transmitter operation, the display shows the primary measurement (M1), secondary measurement (M2), and optionally, process variable 1 (labeled “A”), process variable 2 (labeled “B”), process variable 3 (labeled “C”), and/or process variable 4 (labeled “D”), depending on how you configure the transmitter.

- If configured as **Show 1**, the display shows the primary measurement value (M1) and the configured units.
- If configured as **Show 2**, the display shows the secondary measurement value (M2) and the configured units.
- If process variables 1, 2, 3, or 4 are configured, **Show A**, **Show B**, **Show C**, and **Show D** menu selections also appear. If configured **Show A**, for example, the display shows process variable 1 and its configured units during normal transmitter operation.
- To temporarily view the next measurement(s), press the **ENTER** button. M2 appears briefly. Press **ENTER** again to advance to the first process variable (if configured), and again to cycle through each of the remaining process variables.

  After the last measurement or process variable appears, the display reverts to the configured value.
- If configured as **Rotate**, the display cycles through the primary measurement (M1), secondary measurement (M2), PV1 (A), PV2 (B), PV3 (C), and PV4 (D). When M2 is displayed, the digit **2** blinks in the lower right of the display; when one of the process variables is displayed, the **A**, **B**, **C**, or **D** character blinks in the lower right corner of the display.

NOTE:

- If the displayed measurement is more than five digits, “**99999**” flashes on the display. Selecting different engineering units (EGUs) may result in a shorter measurement that can fit on the display.
- For AP transmitters, “**a**” is typically added to the EGU name on the display (for example, **psia** or **mmHga**). However, if the EGU name is six characters long, the “**a**” is not added.

Figure 38 - Local Display

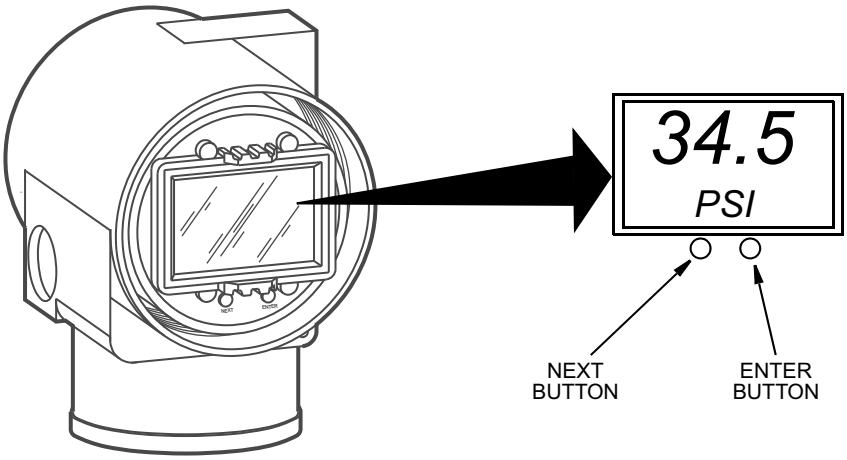

The display and two-button keypad on the front of the transmitter also provide access to calibration, configuration, and other functions. You can access these operations by means of a menu system. To access the multi-level menu from the transmitter’s normal operating mode, press **NEXT**. To exit this menu, cancel your calibration or

configuration, and return to the normal operating mode at any time, navigate to **Cancel** and press **ENTER**.

Figure 39 - Top Level Menu

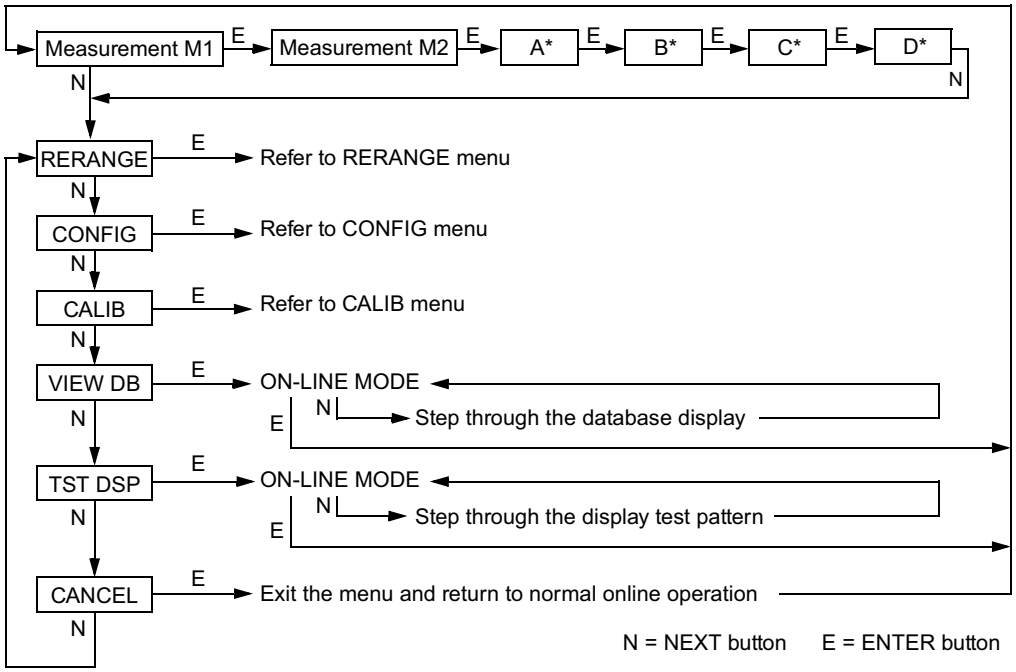

*A through D (PV1 through PV4) display only if they are configured to display.

Entering Strings and Numeric Values

To enter strings or numeric values, follow these steps:

1. At the appropriate prompt, press the **ENTER** button. The display shows the last (or default) value with the first character flashing.
2. Use the **NEXT** button to select the first character, then press **ENTER**.

   Your selection is entered. The next character flashes.
3. Repeat the previous step until you have entered all five characters. If your string or value has fewer than five characters, use leading or trailing zeroes in the remaining positions, if required.

   When you have entered the fifth character, the display prompts you to place the decimal point.
4. Select the desired decimal point location by pressing **NEXT** until the decimal point is placed as desired. Press **ENTER**.

   NOTE:

   - You cannot place the decimal point immediately after the first digit. For example, you cannot enter a value as 1.2300; you must enter it as 01.230.
   - The decimal position is identified by flashing, except at the position after the fifth digit. At that position, a whole number is represented, and the decimal point is assumed.

   The display advances to the next menu item.

Table 11 - Permitted Characters for the Local Display

Alphanumeric Characters		Numeric Characters
@	'	
, (comma)	(	
A-Z (uppercase)	)	- (minus sign)
a-z (lowercase)	*	. (decimal point)
[	+	0
]	- (hyphen)	1
\	. (period)	2
^	/	3
_ (underscore)	0-9	4
(space)	:	5
!	;	6
"	<	7
#	>	8
$	=	9
%	?	
&		

Reranging

Since the transmitter continuously determines an internal digital value of the measured pressure from the lower range limit (LRL) to the upper range limit (URL), the operating range (LRV and URV) can be assigned to any pressure values within the span and range limits, without the application of pressure.

- Reranging does not affect the calibration of the transmitter; that is, it does not affect the optimization of the internal digital value of pressure over a specific calibrated range.
- If the reranged LRV and URV are not within the calibrated range, the measured values may not be as accurate as when the LRV and URV are within the calibrated range.
- If you need to perform a span calibration after reranging the transmitter, be sure to perform an offset calibration (**Cal LRV**) before performing the span calibration (**Cal URV**) operation. If you do not perform the offset calibration, you may get a **BADSPAN** message.

You can rerange the transmitter by entering new database values for the LRV and URV.

1. With the transmitter in normal operating mode, press the **NEXT** button to access the transmitter's top level menu. The first menu item is **RERANGE**. Press **ENTER** to select it.
2. Use the procedure in *Entering Strings and Numeric Values, page 52* to adjust **M1_URV** and/or **M1_LRV** as desired.
   - To edit the upper range value, press **ENTER** at the **M1_URV** prompt.
   - To edit the lower range value, press **ENTER** at the **M1_LRV** prompt.

NOTE: For DP transmitters, **M1_LRV** is bypassed if **M1 MODE** is configured as square root, because **M1_LRV** must be zero.

NOTE: Pressure measurements outside of the range (URL - LRL) ± 10% result in a blinking measurement on the display and a FOUNDATION Fieldbus status of **Uncertain**.

Figure 40 - Rerange Menu Diagram

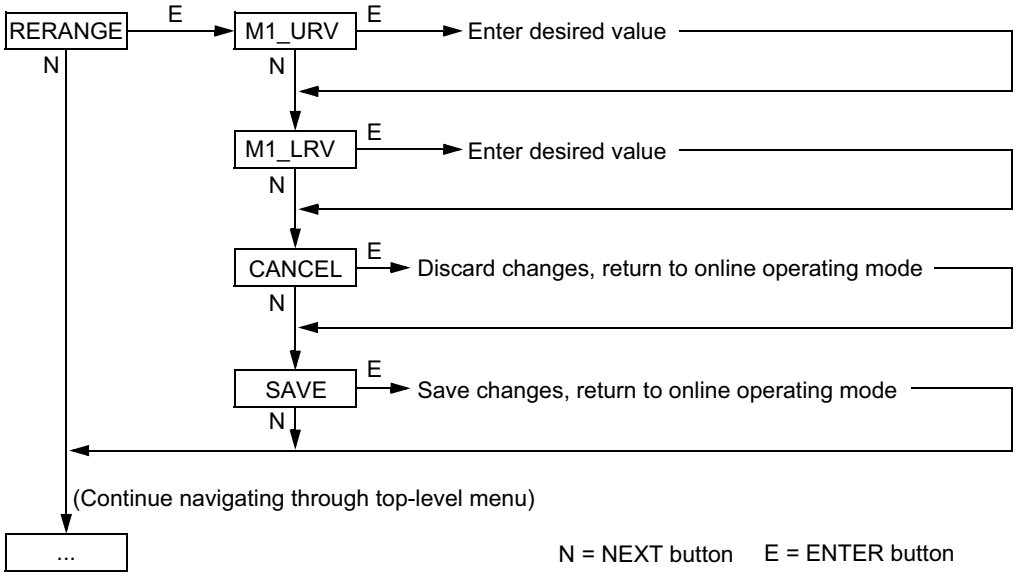

Viewing the Database

You can view the database using the multi-level menu system.

1. From the transmitter's normal operating mode, press the **NEXT** button to access the transmitter's top level menu.
2. Navigate to **VIEW DB**, then press **ENTER**. The display shows the first item in the database, **FMW REV**.
3. Continue stepping through the database by pressing **NEXT**, or exit the database view by pressing **ENTER**.

The following diagram shows the VIEW DB menu. The database items are described in *Transmitter Database Items, page 55*.

Figure 41 - VIEW DB Menu

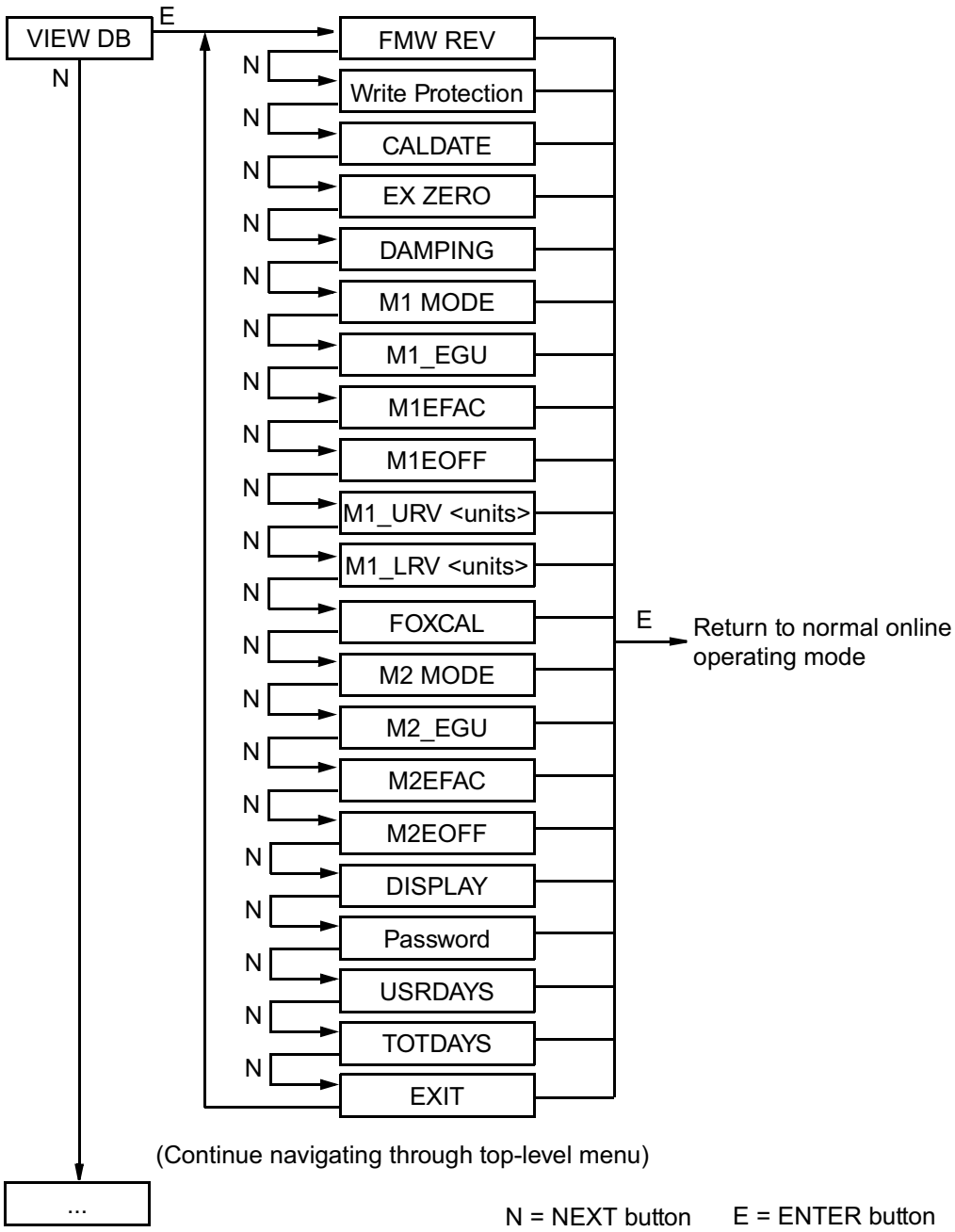

Table 12 - Transmitter Database Items

Database Item	Available Settings or Example
Firmware Revision (**FMW REV**)	**2.0** (example)
write protection status (no parameter label)	**WP DISA** (disabled) **WP ENA** (enabled)
Date of Last Calibration (**CALDATE**)	**01JAN18** (example)
External Zero Status (**EX ZERO**)	**EXZ ENA** (enabled) **EXZ DIS** (disabled)
Damping, in Seconds (**DAMPING**)	**DAMP1/4**, **DAMP1/2**, **DAMP1**, **DAMP2**, **DAMP4**, **DAMP8**, **DAMP16**, **DAMP32**
M1 Mode Output (**M1 MODE**)	Linear: **M1 LIN**

Table 12 - Transmitter Database Items (Continued)

Database Item	Available Settings or Example
Engineering Units for M1 (**M1_EGU**)	Linear only: Pa, MPa, kPa, hPa, bar, mbar, torr, atm, psi, g/cm2, kg/cm2, inH2O (4°C), inH2O (68°F), mmH2O (4°C), mmH2O (68°F), ftH2O (4°C), ftH2O (68°F), inHg (0°C), mmHg (0°C)
M1 Engineering Factor (**M1EFAC**)	**1000.0** (example)
Offset Applied to the Primary Value (**M1EOFF**)	**0.000** (example)
Primary Upper Range Value (**M1_URV** <units>)	**1000.0** (example)
Primary Lower Range Value (**M1_LRV** <units>)	**0.000** (example)
Status of FoxCal™ Multiple Calibration (**FOXCAL**)	**FCALON** (FoxCal™ on) **FCALOFF** (FoxCal™ off)
M2 Mode Output (**M2 MODE**)	Linear: **M1 LIN** Type of square root flow calculation:[37] **M2SQ<1C** (cutoff below 1% of the calibrated differential *pressure* range) **M2SQ<4L** (linear extrapolation below 4% of the calibrated differential *pressure* range) **M2SQ<nC** (user-defined cutoff specified between 0 and 20% of the *flow* upper range value, **M2EFAC**)
Engineering Units for M2 (**M2_EGU**)	Linear: Pa, MPa, kPa, hPa, bar, mbar, torr, atm, psi, g/cm2, kg/cm2, inH2O (4°C), inH2O (68°F), mmH2O (4°C), mmH2O (68°F), ftH2O (4°C), ftH2O (68°F), inHg (0°C), mmHg (0°C) Square root:[37] g/s, g/min, g/h, kg/s, kg/min, kg/h, kg/d, t/min, t/h, t/d, lb/s, lb/min, lb/h, lb/d, STon/min, STon/h, STon/d, LTon/h, LTon/d, %, m3/s, m3/min, m3/h, m3/d, L/s, L/min, L/h, ML/d, CFS, CFM, CFH, ft3/d, SCFM, gal/s, GPM, gal/h, gal/d, Mgal/d, ImpGal/s, ImpGal/min, ImpGal/h, ImpGal/d, bbl/s, bbl/min, bbl/h, bbl/d, Nm3/h, Sm3/h, NL/h, MSCFD, MMSCFD
M2 Engineering Factor (**M2EFAC**)	**1000.0** (example)[37]
Offset Applied to the Secondary Value (**M2EOFF**)	**0.000** (example)
Measurement(s) and/or process variable(s) shown on the display (**DISPLAY**)	**SHOW M1** (primary measurement) **SHOW M2** (secondary measurement) **SHOW A** (process variable 1) **SHOW B** (process variable 2) **SHOW C** (process variable 3) **SHOW D** (process variable 4) **ROTATE** (display all configured measurements/process variables in rotation)
Current Password Setting	**NO PWDS** (no password) **ENA PWD** (enable password) **CFGONLY** (configuration only) **CFG+CAL** (configuration and calibration)
Number of days the transmitter has been running since the Time In Service Meter was reset (**USRDAYS**)	**7** (example)
Number of days the transmitter has been running since it was installed (**TOTDAYS**)	**61** (example)

37. Differential pressure transmitters only.

Testing the Display

You can use the multi-level menu system to test the transmitter display. Follow these steps:

1. From the transmitter's normal operating mode, press **NEXT** to access the transmitter's top level menu.
2. Press **NEXT** to navigate to **TST DSP** and press **ENTER**. The display shows the first test segment pattern.
3. Step through the five test patterns by pressing **NEXT** repeatedly. Refer to the diagram.
4. Exit the display test by pressing **ENTER**.

Figure 42 - Display Test Segment Patterns

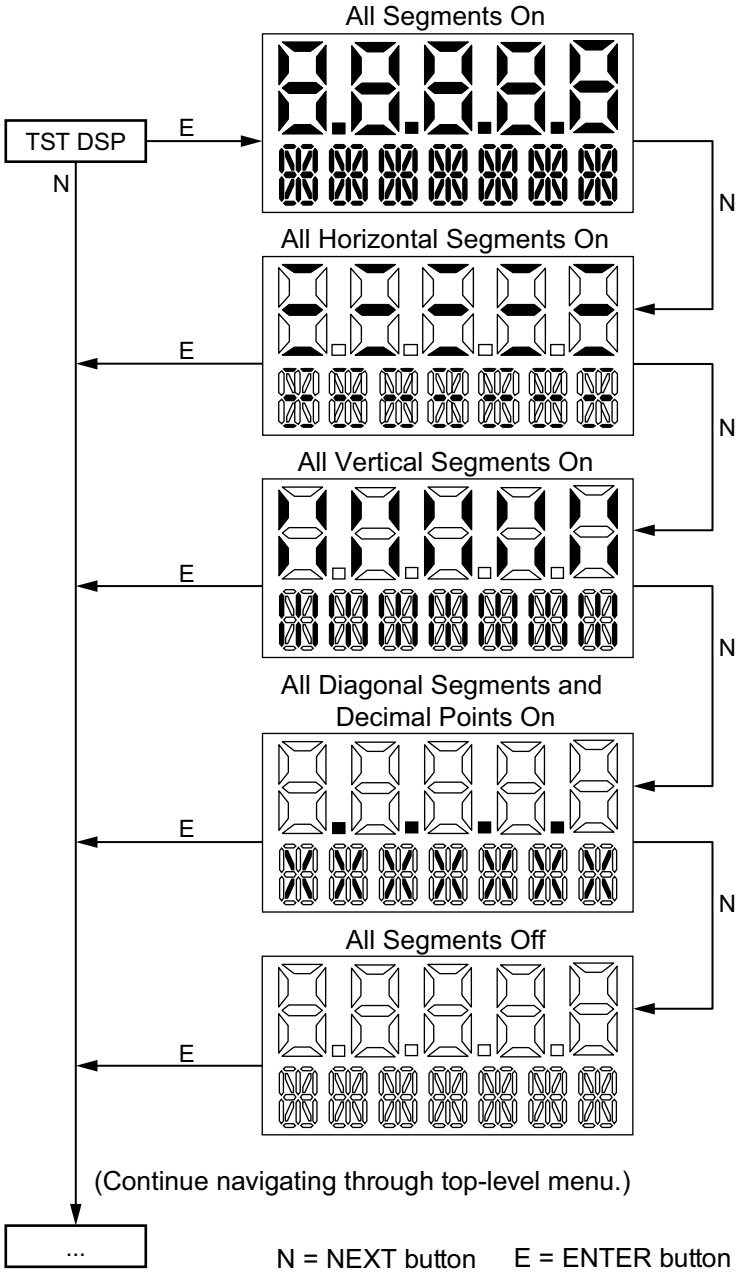

Messages

The following operation-related messages may appear on the display.

Status	Condition Tested	Message	Description
Startup	Database corruption	INITBAD	Perform a SET GDB procedure.
Normal operation	Write protection enabled	WR PROT	Displays periodically to notify that unit is write protected.
	Any non-online condition	OFFLINE	Notifies of a non-online condition.
Measurement outside of limits	Pressure	IN1 BAD	• Extreme overrange or underrange input; correct input condition. • Bad calibration; recalibrate transmitter. • Bad sensor connection; check electronics module to sensor. • Inoperative sensor.
	Electronics temperature	IN2 BAD	• Bad sensor connection; check electronics module connection to sensor. • Inoperative sensor.
	Sensor (process) temperature	IN3 BAD	

Configuration

You can configure the transmitter by accessing the menu system using the **ENTER** and **NEXT** buttons on the local display, or by using a remote configurator.

If your transmitter was ordered with optional feature -C2, the factory default values were customized.

Configuration Using the Optional Local Display

To access configuration mode from normal operating mode, repeatedly press the **NEXT** button until the display reads **CONFIG**. Press the **ENTER** button to select **CONFIG**. The display shows the first item in the Configuration menu.

NOTE:

- The standard factory default configuration is not used if model code option -C2 was specified for the order. Option -C2 is a custom factory configuration to user specifications.
- You can configure most parameters using the local display. For more complete configuration capability, use a Device Description (DD) from the FOUNDATION Fieldbus host system or a Device Type Manager (DTM) from a PC-based configurator.
- During configuration, a single change could affect several parameters. For this reason, if you make a mistake, review the entire database. Or, use the **CANCEL** feature to restore the transmitter to its starting configuration and begin again.

Proceed to configure your transmitter by using the **NEXT** and **ENTER** buttons to make your selections. Refer to the menu structure diagrams and accompanying table for guidance.

At any time during the configuration, you can **CANCEL** your changes and return to online mode, or **SAVE** your new configuration.

Configuration Menu Structure

Figure 43 - Configuration Menu Structure (1 of 5)

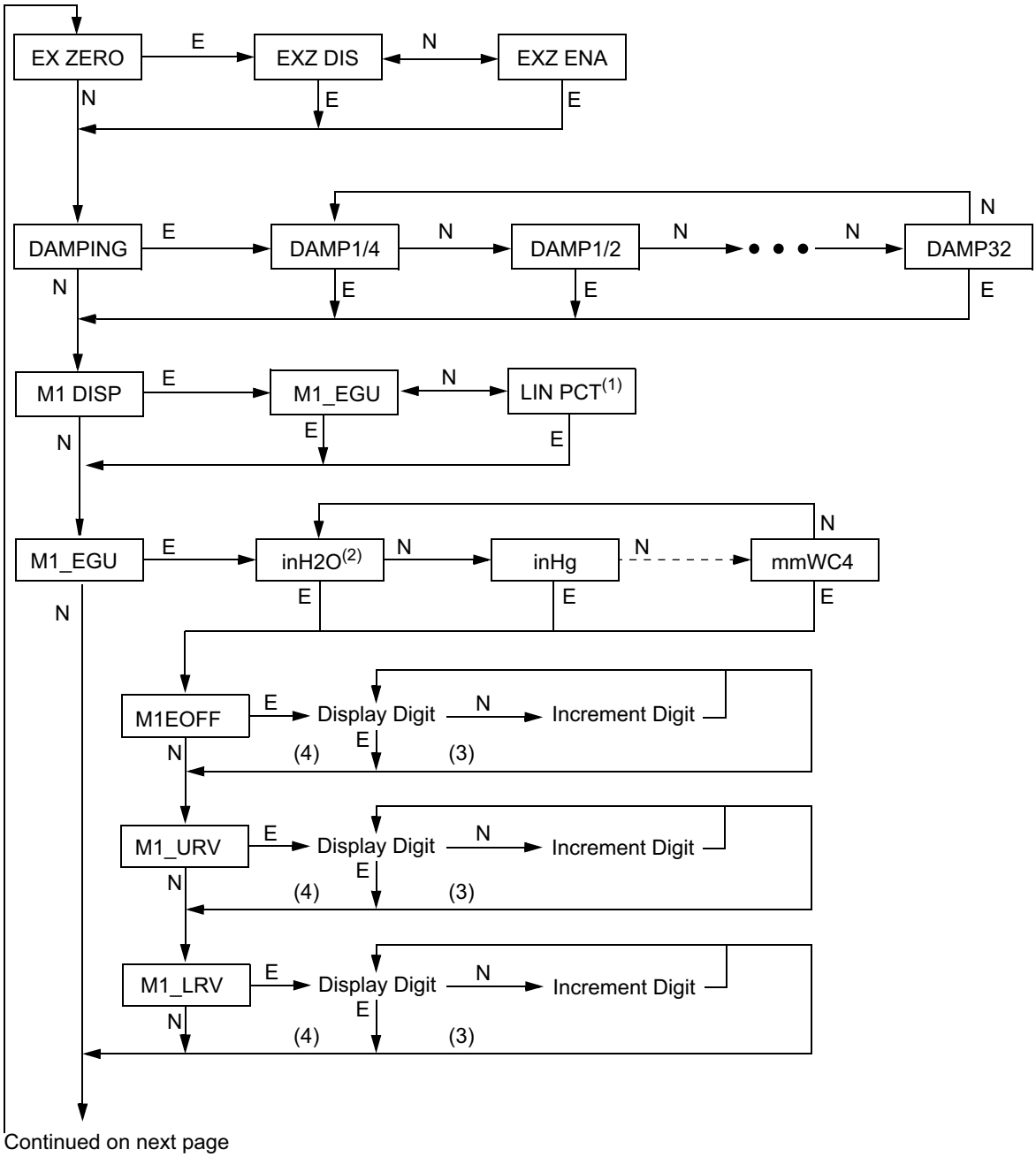

Continued on next page

Notes:
1. **LIN PCT** provides percent output on the local display only.
2.The first unit that appears in the menu is the present setting, so inH2O may not be the first unit in the list.
3.If character is not the last position on the display line, advances to the next character.
4.If character is the last position on the display line, advances to the next menu item.

Figure 44 - Configuration Menu Structure (2 of 5), AP and GP Transmitters Only

Continued from previous page

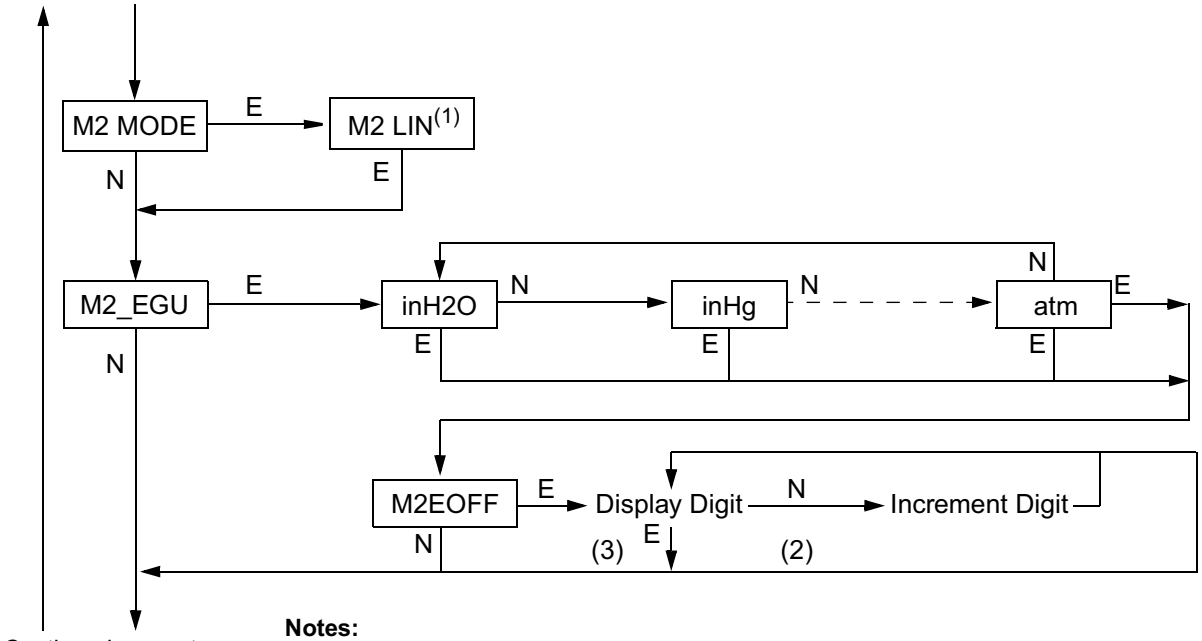

Continued on next page

Notes:

1. Square root functions are not available for absolute and gauge pressure transmitters.
2. If character is not the last position on the display line, advances to the next character.
3. If character is the last position on the display line, advances to the next menu item.

Figure 45 - Configuration Menu Structure (3 of 5), DP Transmitters Only

Continued from previous page

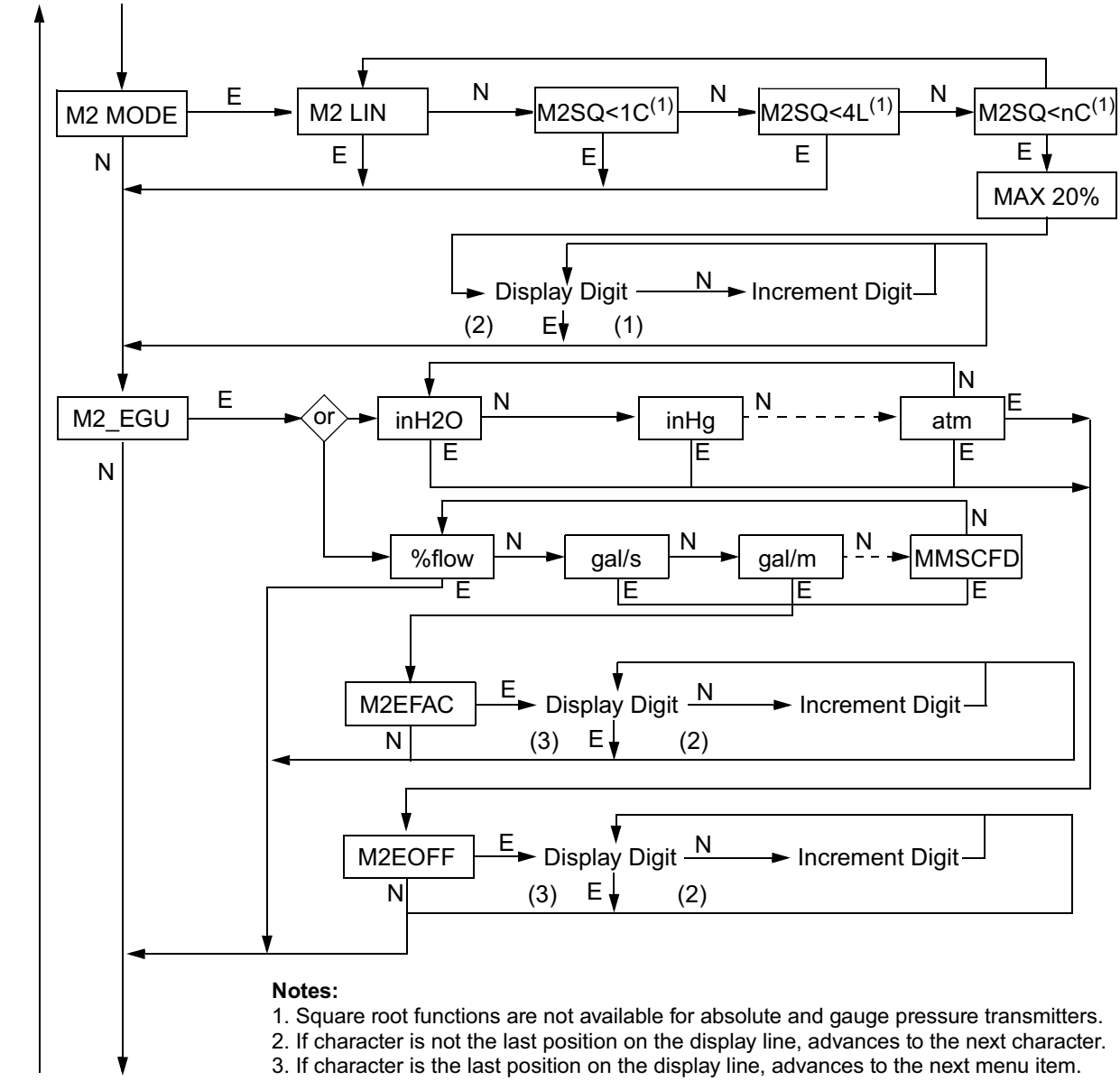

Notes:
1. Square root functions are not available for absolute and gauge pressure transmitters.
2. If character is not the last position on the display line, advances to the next character.
3. If character is the last position on the display line, advances to the next menu item.

Continued on next page

Figure 46 - Configuration Menu Structure (4 of 5)

Continued from previous page

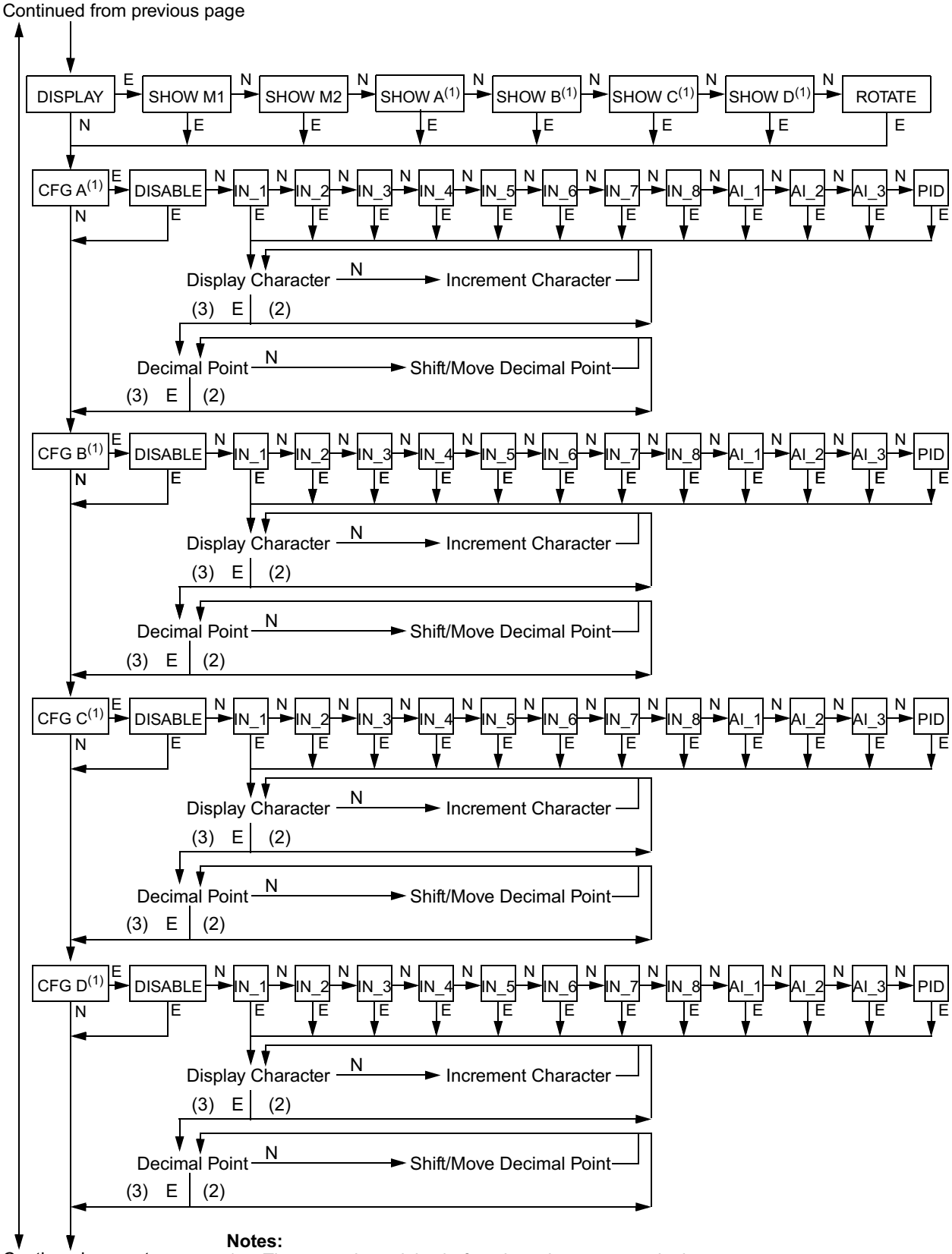

Continued on next page

Notes:

1. There may be a delay before these items appear in the menu.
2. If character is not the last position on the display line, advances to the next character.
3. If character is the last position on the display line, advances to the next menu item.

Figure 47 - Configuration Menu Structure (5 of 5)

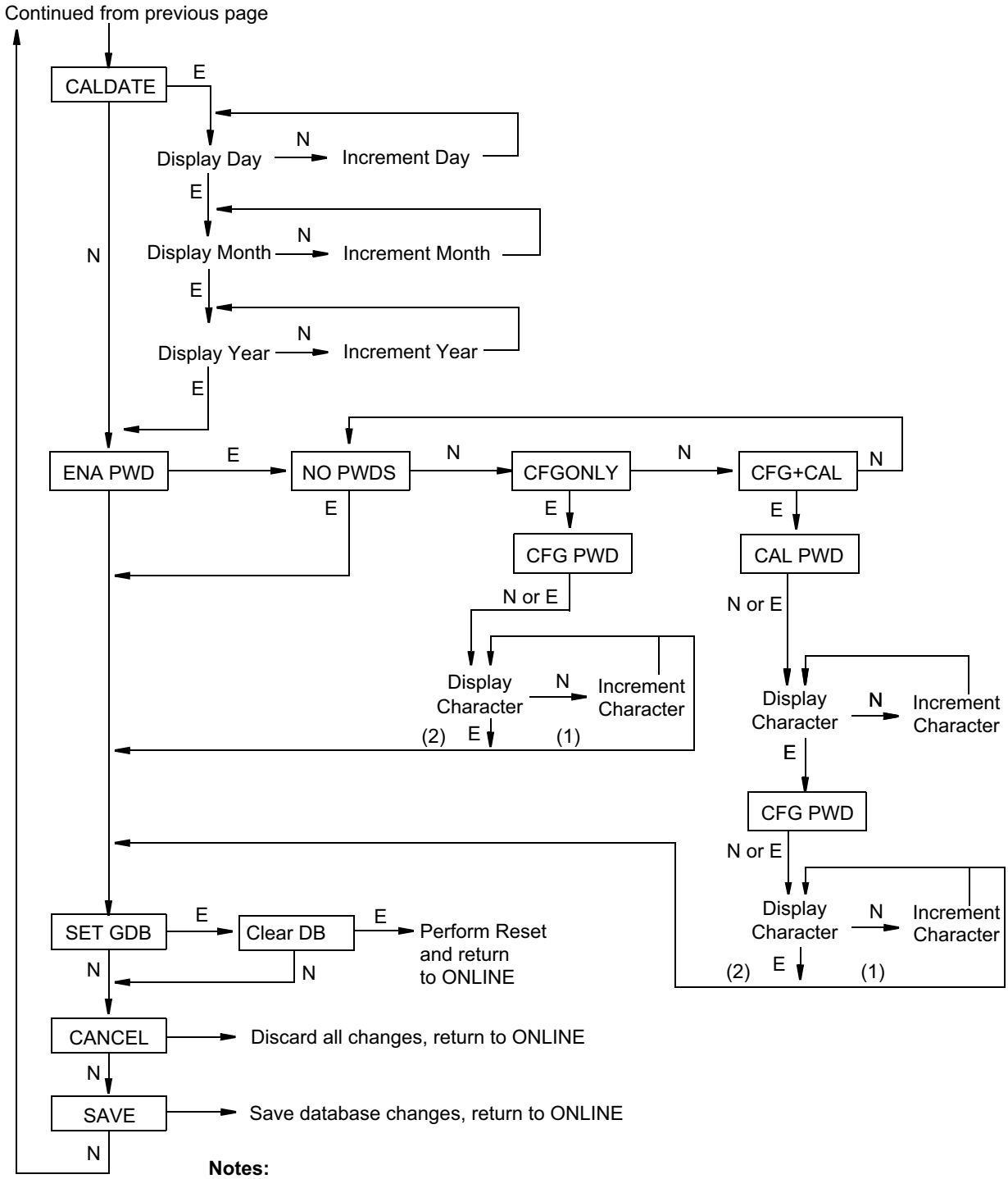

Notes:

1. If character is not the last position on the display line, advances to the next character.
2. If character is the last position on the display line, advances to the next menu item.

Configuration Menu Items

In general, use the **NEXT** button to select an item, and the **ENTER** button to specify a selection.

Item	Description	Default
EX ZERO[38]	The External Zero feature allows you to enable or disable the optional external zero pushbutton. Navigate to the **EX ZERO** menu selection and press **ENTER**. Use the **NEXT** button to select **EXZ DIS** (disable) or **EXZ ENA** (enable), and press **ENTER**. (FF **CAL_AT_ZERO**)	Disabled
DAMPING	Damping can be set to 0.25, 0.5, 1, 2, 4, 8, 16, or 32 seconds. To configure damping, navigate to the **DAMPING** menu selection and press **ENTER**. Use the **NEXT** button to select the desired damping value, then press **ENTER**. **NOTE:** Selecting a value of **DAMP1/4** provides the fastest response. (FF **SENSOR_DAMPING**)	**DAMP1/4**
M1 DISP	If the primary output is in linear mode, this parameter allows you to configure the display to show engineering units or percent of span. (If the primary output is a square root flow calculation, **M1 DISP** is not available.) To configure the display to show engineering units or percent, navigate to the **M1 DISP** menu selection and press **ENTER**. Use the **NEXT** button to select **M1_EGU** or **LIN PCT** and press **ENTER**. **LIN PCT** only provides percent readings on the display. The M1 engineering unit is used for remote communication of Measurement #1, even if **LIN PCT** is selected.	Engineering units
M1_EGU	This parameter allows you to set the engineering units for the primary measurement. Select one of the following pressure units for your display and transmission: Pa, MPa, kPa, hPa, bar, mbar, torr, atm, psi, g/cm2, kg/cm2, inH2O (4°C), inH2O (68°F), mmH2O (4°C), mmH2O (68°F), ftH2O (4°C), ftH2O (68°F), inHg (0°C), mmHg (0°C). The transmitter then automatically adjusts **M1EFAC** (engineering factor), **M1_URV** (upper range value), **M1_LRV** (lower range value), and defaults the **M1EOFF** parameter to zero. (FF **PRIMARY_VALUE_RANGE**)	inH_2O or psi
M1EOFF	This parameter allows you to configure an offset value to apply to the primary measurement. You can introduce an offset by entering a nonzero value for **M1EOFF**. The offset affects the value of the PV that is transmitted in engineering units and shown on the display. This feature can be used in applications such as an elevated water storage tank where the transmitter is at grade level but the output corresponds to the level of the tank. An offset value can also be used for a grade level water storage tank where the transmitter is installed above the bottom of the tank where the output should correspond to the level in the tank. (FF **PRIMARY_VALUE_OFFSET**)	0
M1_URV	This parameter allows you to configure the upper range value of the primary measurement. To edit the upper range value of the primary measurement, navigate to the **M1_URV** menu selection and press **ENTER**. Define your URV. (See *Entering Strings and Numeric Values, page 52*.) **NOTE: M1_URV** must never be less than **M1_LRV**. In addition, the difference between URV and LRV must be greater than the minimum span, less than the maximum span, within the maximum range, and within the sensor range. (FF **PRIMARY_VALUE_RANGE**)	URL
M1_LRV	This parameter allows you to configure the lower range value of the primary measurement. To edit the lower range value of the primary measurement, navigate to the **M1_LRV** menu selection and press **ENTER**. Define your LRV. (See *Entering Strings and Numeric Values, page 52*.) **NOTE: M1_LRV** must never be greater than **M1_URV**. In addition, the difference between URV and LRV must be greater than the minimum span, less than the maximum span, within the maximum range, and within the sensor range. (FF **PRIMARY_VALUE_RANGE**)	0

38. For transmitters that have the External Zero option.

Item	Description	Default
M2 MODE	M2 is a secondary measurement that can be shown on the display. You might use this feature to display M1 in your primary pressure units, and M2 in a different set of pressure units. For AP and GP transmitters, the secondary output is in linear mode, which corresponds to pressure units. For DP transmitters, M2 can also be configured to a square root mode, which corresponds to flow units. To configure the mode of the secondary output, press **ENTER** at the **M2 MODE** prompt, and then use the **NEXT** button to select one of the following: • **M2 LIN**: Linear (pressure units) • **M2SQ<1C**: Square root flow calculation with cutoff below 1% of calibrated differential *pressure* range • **M2SQ<4L**: Square root flow calculation with linear extrapolation below 4% of calibrated differential *pressure* range • **M2SQ<nC**: Square root flow calculation with a user-configured cutoff specified between 0 and 20% of the *flow* upper range value, **M2EFAC** (FF **THIRD_VALUE_TYPE**)	Linear
M2_EGU	This parameter allows you to set the engineering units for the secondary measurement. • When **M2 MODE** is set to **M2 LIN**: 1. Select one of the following pressure engineering units for your display and transmission: Pa, MPa, kPa, hPa, bar, mbar, torr, atm, psi, g/cm2, kg/cm2, inH2O (4°C), inH2O (68°F), mmH2O (4°C), mmH2O (68°F), ftH2O (4°C), ftH2O (68°F), inHg (0°C), mmHg (0°C). 2. The transmitter then automatically adjusts **M2EFAC** (engineering factor), **M2_URV** (upper range value), **M2_LRV** (lower range value), and defaults the **M2EOFF** parameter to zero. • For DP transmitters only, when **M2 MODE** is set to any of the square root settings (**M2SQ<1C**, **M2SQ<4L**, or **M2SQ<nC**): 1. Select one of the following flow engineering units for your display and transmission: g/s, g/min, g/h, kg/s, kg/min, kg/h, kg/d, t/min, t/h, t/d, lb/s, lb/min, lb/h, lb/d, STon/min, STon/h, STon/d, LTon/h, LTon/d, %, m3/s, m3/min, m3/h, m3/d, L/s, L/min, L/h, ML/d, CFS, CFM, CFH, ft3/d, SCFM, gal/s, GPM, gal/h, gal/d, Mgal/d, ImpGal/s, ImpGal/min, ImpGal/h, ImpGal/d, bbl/s, bbl/min, bbl/h, bbl/d, Nm3/h, Sm3/h, NL/h, MSCFD, MMSCFD. 2. Check the **M2EFAC** (M2 engineering factor) and adjust it if necessary. (FF **THIRD_VALUE_RANGE**)	Same as **M1_EGU**
M2EFAC	For DP transmitters, the **M2EFAC** parameter is the numerical relationship between the measured span in pressure units and the displayed (and transmitted) span in flow units. It is the displayed URV in flow units (which is also the span in flow units, since flow ranges must be zero-based). For example, for a 200 inH_2O transmitter with a measured range of 0 to 100 inH_2O and displayed range of 0 to 500 gal/m, set **M2EFAC** to 500. **NOTE:** Actual flow rates in the process are dependent upon your specific installation (pipe diameter, for example). Be sure to use values for **M1EFAC** and **M2EFAC** that correspond to your installation and process conditions. To edit the span in your configured flow units, navigate to the **M2EFAC** menu selection and press **ENTER**. (See *Entering Strings and Numeric Values, page 52*.) (FF **THIRD_VALUE_FLOW_MAX**)	n/a
M2EOFF	This parameter allows you to configure an offset value to apply to the secondary measurement. You can introduce an offset by entering a nonzero value for **M2EOFF**. The offset affects the value of the PV that is transmitted in engineering units and displayed. This feature can be used in applications such as an elevated water storage tank where the transmitter is at grade level but the output corresponds to the level of the tank. An offset value can also be used for a grade level water storage tank where the transmitter is installed above the bottom of the tank where the output should correspond to the level in the tank. (FF **THIRD_VALUE_OFFSET**)	0

Item	Description	Default
DISPLAY	This parameter allows you to configure whether the display shows **M1**, **M2**, and if enabled, **A (PV1)**, **B (PV2)**, **C (PV3)**, **D (PV4)**. The Display parameter also allows you to display a rotation of all the configured measurements. To configure the display value, navigate to the **DISPLAY** menu selection and press **ENTER**. Use the **NEXT** button to select **SHOW M1**, **SHOW M2**, **SHOW A**, **SHOW B**, **SHOW C**, **SHOW D**, or **ROTATE** and press **ENTER**. **NOTE: SHOW A**, **SHOW B**, **SHOW C**, and **SHOW D** menu selections only appear if **PV1**, **PV2**, **PV3**, and/or **PV4** are enabled.	M1
CFG A CFG B CFG C CFG D	These menu options allow you to enable, disable, and configure Process Variable 1 as A, Process Variable 2 as B, Process Variable 3 as C, and Process Variable 4 as D. To enable (or disable) PV1, 2, 3, or 4: 1. Navigate to the **CFG A**, **CFG B**, **CFG C**, or **CFG D** menu selection. By default, **A**, **B**, **C**, and **D**are set to **DISABLE**. 2. Press **NEXT** until you navigate to the measurement you want to configure: **IN_1**, **IN_2**, **IN_3**, **IN_4**, **IN_5**, **IN_6**, **IN_7**, **IN_8**, **AI_1**, **AI_2**, **AI_3**, or **PID**. Press **ENTER** to select the measurement. 3. Enter the units and decimal point placement for the selected PV as described in *Entering Strings and Numeric Values, page 52*. These items may be slower to appear in the menu while the transmitter is starting up. (FF **PV_DISPLAY_SETUP_A**, **PV_DISPLAY_SETUP_B**, **PV_DISPLAY_SETUP_C**, and **PV_DISPLAY_SETUP_D**)	n/a
CALDATE	**CALDATE** allows you to set the date of the last calibration. This parameter is optional, but it can be used for record-keeping or plant maintenance. To edit the calibration date, navigate to the **CALDATE** menu selection and press **ENTER**. You can then change the day, month, and year. The display shows the last date with the day flashing. Use the **NEXT** button to step through the library of digits to select the desired day, then press **ENTER**. Repeat this process for the month and year. (FF **SENSOR_CAL_DATE**)	None, or date of calibration in factory
ENA PWD	This parameter allows you to enable or disable password(s). By default, passwords are disabled. **NOTE: CAL PWD** allows access to calibration mode only; **CFG PWD** allows access to both configuration and calibration. To set a password for configuration only, or for both configuration and calibration: 1. Navigate to **ENA PWD** and press **ENTER**. 2. Navigate to **CFGONLY** or **CFG+CAL** and press **ENTER**. • If you selected **CFG+CAL**, the **CAL PWD**prompt appears. • If you selected **CFGONLY**, the **CFG PWD** prompt appears. 3. Use the **NEXT** button to step through the library of characters to select the desired first character, then press **ENTER**. Your selection is entered, and the second character flashes. Repeat this procedure until you have created your password. • If the password has fewer than six characters, use blanks for the remaining positions. 4. When you have configured the sixth position, the display advances to the next menu item. 5. Record your new password before saving changes to the database. To disable passwords: 1. Navigate to the **ENA PWD** menu selection and press **ENTER**. 2. Navigate to the **NO PWDS** menu selection and press **ENTER**. • If a configuration password was previously set, you are prompted to enter it.	**NO PWD**
CFG PWD	User-set configuration password (six characters).	None
CAL PWD	User-set calibration password (six characters).	None
SET GDB	**SET GDB** allows you to rewrite calibration values (slope and offset) with default values. It resets M1 and M2 EGUs to psi. If your transmitter database becomes corrupted and you receive an **INITBAD** message upon startup, this function enables you to rewrite the calibration values with default values. **NOTE:** Any user calibration values you have entered will be lost. Therefore, do not select **SET GDB** if your transmitter is functioning normally.	n/a

Messages

The following configuration-related messages may appear on the optional display.

Parameter	Condition Tested	Message	Description
Password Protection	Password	**BAD PWD**	Bad password entered; use another.
Write Protection	Write Protection Enabled	**REJECT**	User attempted an action that is write-protected.
M1_URV	M1_URV>max pressure in EGU	**URV>FMX**	Entered pressure is greater than maximum rated pressure of transmitter. Check entry. Verify EGUs.
	M1_URV<min pressure in EGU	**URV<FMN**	Entered pressure is less than the minimum rated pressure of the transmitter. Check entry. Verify EGUs.
	M1_URV=M1_LRV	**LRV=URV**	Cannot set span to 0. Check entry. Check **M1_LRV**.
	M1 turndown exceeds limit	**BADTDWN**	Check entry. Check **M1_LRV**.
	URV<0 with M1 or M2 SqRt	**URV<LRV**[39]	Square root mode with nonzero LRV is not valid. Change **M1_LRV** to 0.
M1_LRV	M1_LRV>max pressure in EGU	**LRV>FMX**	Entered pressure is greater than the maximum rated pressure of the transmitter. Check entry. Verify EGUs.
	M1_LRV<min pressure in EGU	**LRV<FMN**	Entered pressure is less than the minimum rated pressure of the transmitter. Check entry. Verify EGUs.
	M1_URV=M1_LRV	**LRV=URV**	Cannot set span to 0. Check entry. Check **M1_URV**.
	M1 turndown exceeds limit	**BADTDWN**	Check entry. Check **M1_URV**.
M2 MODE[39] (being changed to square root)	M1_LRV≠0	**LRVnot0**	Square root mode with nonzero LRV is not valid. Change **M1_LRV** to 0.
	M1_URV<0	**URV<LRV**	Square root mode with negative URV is not valid. Change **M1_URV** to a positive value.
	OUT DIR is OUT REV	**URV<LRV**	Square root mode with URV less than LRV is not valid. Change **M1_LRV** to 0 and **M1_URV** to a positive value.
	M2EFAC<0	**-M2EFAC**	**M2EFAC** cannot be negative. Change **M2EFAC** to a positive value.
	M2EFAC=0	**0M2EFAC**	**M2EFAC** cannot be zero. Change **M2EFAC** to a positive value.
	M1EOFF≠0 or M2EOFF≠0	**BADEOFF**	Square root mode with nonzero **M1EOFF** and **M2EOFF** is not valid. Change **M1EOFF** and **M2EOFF** to 0.
M2EFAC[39]	M2EFAC<0	**-M2EFAC**	Negative **M2EFAC** is not valid. Change **M2EFAC** to a positive value.
	M2EFAC=0	**0M2EFAC**	**M2EFAC**=0 is not valid. Change **M2EFAC** to a positive value.

Configuration from a FOUNDATION Fieldbus Host

A FOUNDATION Fieldbus system has two main parts:

- A **Control Application Process (CAP)**, which contains the Resource Block, the Analog Input Blocks, and a PID Block if one is used. The contents of these blocks are defined by the Fieldbus Foundation and are configured by the host, often using a template.
- A **Device Application Process (DAP)**, which contains the Transducer Block. Its contents vary with the product and are usually configured by an operator using fieldbus configurator software.

The Device Address and Device Tag must be configured for the device to operate with a DCS system. Neither the Address nor the Tag can be configured with the DD or

39. DP transmitters only.

DTM. The Address must be set to a temporary address to configure the Tag, then set back to a working address for device operation. On some DCS systems, the Address is handled automatically and the user never has to know the details. The Tag is essential to map the device into the proper control strategy. Refer to your DCS documentation for details.

The configuration procedures in this section focus on setting the configurable parameters of the Transducer Block. They also describe scaling parameters in the Analog Input Blocks that must also be set. Refer to *Appendix A: FOUNDATION Fieldbus Parameters, page 165* for more information about the parameters.

Transmitter FOUNDATION Fieldbus Block Model

The transmitter uses the following FOUNDATION Fieldbus block types:

- One Resource Block, which contains all the device-specific features of the transmitter.
- One Transducer Block, which configures the measurement and display.
- One Display Block, which can collect external process variables.
- Multiple Function blocks, each of which executes different application functions of the transmitter:
  - Three Analog Input (AI) Function Blocks, of which two can be instantiated in addition to one permanent block. Block instantiation is done by the host control system or the DTM. Refer to the host or DTM manual for more information.
  - One PID Function Block. The PID block may be used in conjunction with internal blocks, external blocks, or both internal and external blocks.

Figure 48 - Transmitter FF Block Model

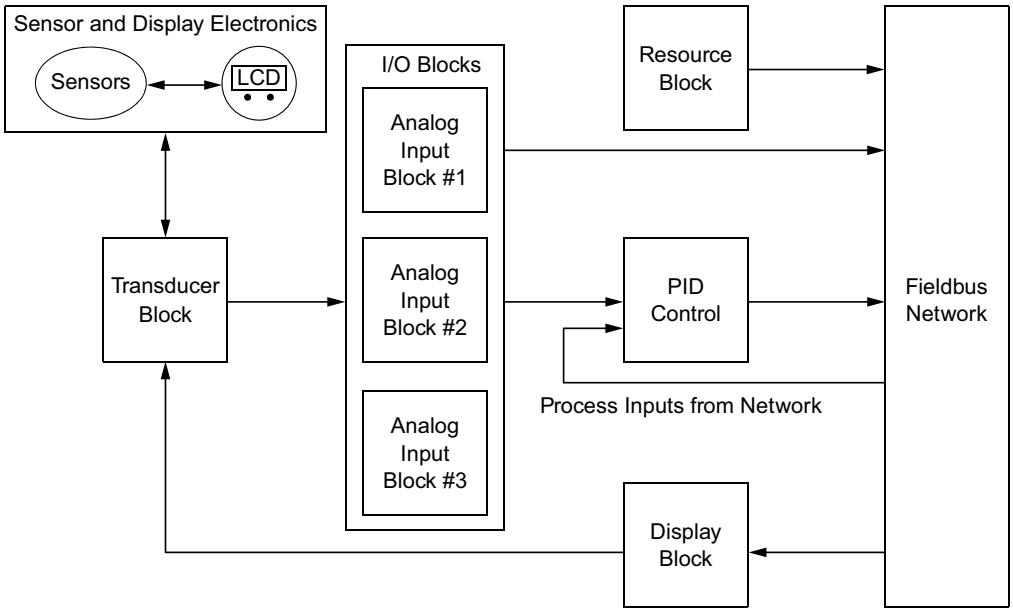

Nonvolatile Parameters

All nonvolatile or static parameters are saved in a nonvolatile memory configuration and used if the device is restarted.

Common Parameter Type Definitions

- ***_ALM**: The DCS uses this alarm type parameter to synchronize alarm states.

The first element of the ***_ALM** parameter is the **Unacknowledge** subparameter, which may be set to one of the following states:

- 0: Undefined
- 1: Acknowledged
- 2: Unacknowledged

On power-up, the **Unacknowledge** subparameter will always be set to **Undefined**. When an alarm occurs, it will be set to **Unacknowledged**, and must be manually set to **Acknowledged**.

- ***_PRI**: These parameters set the priority of the associated alarm of the same name, and can have one of the following values:
  - 0: Disabled
  - 1: Local Alarm
  - 2: Block Level Alarm
  - 3–7: Advisory Level Alarm
  - 8–15: Critical Level Alarm

Resource Block

The Resource Block is used to define hardware-specific characteristics of the Function Block Applications. It provides the manufacturer name, device name, DD, block status, and hardware details. It also indicates how much resource (memory and CPU) is available and controls the overall device. All data is modeled within a controlled space so that no outside inputs into this block are required; that is, the Resource block cannot be linked to other blocks.

This parameter set is intended to be the minimum required for the function block application associated with the resource in which it resides. Some parameters that could be in the set, such as calibration data and ambient temperature, are part of their own respective transducer blocks.

Standard FOUNDATION Fieldbus parameters **MANUFAC_ID**, **DEV_TYPE**, **DEV_REV**, and **DD_REV** are required to identify and locate the DD so that Device Description Hosting Services can select the correct DD. See *Installing the FOUNDATION Fieldbus Support Files, page 49*. The parameter **HARD_TYPES** is a read-only bit string that indicates the types of hardware that are available to this resource.

Refer to *Resource Block Parameters, page 165* for details about the Resource Block parameters.

Operating Mode

The “mode” is used to control major states of the resource, and is set by means of the **MODE_BLK** parameter group. The Resource Block supports the following operating modes:

- OOS (out of service) mode stops all function block execution. The actual mode of the function blocks is changed to OOS, but the target mode is not changed.
- Auto (automatic) mode allows normal operation of the resource.

  NOTE: The OOS block status is also displayed by means of the **BLOCK_ERR** parameter, described in *Resource Block Parameters, page 165*. In OOS mode, all write parameters can be accessed without restriction if write protection has not been enabled.

Block Status

The **RS_STATE** parameter contains the operational state of the Function Block Application for the resource containing this resource block.

- STANDBY: The Resource Block is in the OOS operating mode. It is not possible to execute the remaining function blocks.
- ONLINE LINKING: The configured connections between the function blocks have not yet been established.
- ONLINE: Normal operating status, the Resource Block is in the AUTO operating mode. The configured connections between the function blocks have been established.

RESTART Parameter

NOTICE
RISK OF PROCESS DISRUPTION Restart will disrupt or stop an instrument working in a running process. Consider the impact on a running process prior to using the RESTART parameter. **Failure to follow these instructions can result in disruption of the process.**

The **RESTART** parameter allows degrees of initialization of the resource. They are:

- Run: Passive state of the parameter
- Restart Resource: Restarts the Resource block; intended to clear up problems (for example, the memory management resource)
- Defaults: Restarts with the specified FOUNDATION Fieldbus parameters' default values
- Restart Processor: Provides a way to reset the processor associated with the resource
- Restart Factory Defaults: All device parameters, including communications, Tag, and Address are reset to default values
- Restart Factory Configuration: Resets all device parameters to the condition at delivery
- Restart Factory Instantiation: Sets all blocks back to the condition at delivery and restores all AI blocks

Timeout for Remote Cascade Modes

Parameters **SHED_RCAS** and **SHED_ROUT** set the time limit for loss of communication from a remote device. These constants are used by all function blocks that support a remote cascade mode. The effect of a timeout is described in Mode Calculation. Shedding from RCAS/ROUT does not happen when **SHED_RCAS** or **SHED_ROUT** is set to zero.

Alert Notification

The **MAX_NOTIFY** parameter value is the maximum number of alert reports that this resource can have sent without getting a confirmation, corresponding to the amount of buffer space available for alert messages. You can set the number lower than that, to control alert flooding, by adjusting the **LIM_NOTIFY** parameter value. If **LIM_NOTIFY** is set to zero, no alerts are reported.

The **CONFIRM_TIME** parameter is the time for the resource to wait for confirmation of receipt of a report before trying again. If **CONFIRM_TIME**=0, the device does not retry.

FEATURES and FEATURE_SEL Parameters

These parameters determine optional behavior of the resource. **FEATURES** defines the available features and is read-only. **FEATURE_SEL** is used to turn on an available feature by configuration.

The device supports the following features:

- Reports
- Fault State
- Hard Write Lock
- Change of BYPASS in automatic mode
- Multi-bit Alarm (Bit-Alarm)
- Deferral of Inter-Parameter Write Checks

Fault State for Function Block

If you set the **SET_FSTATE** parameter, the **FAULT_STATE** parameter indicates active and causes all output function blocks in the resource to go immediately to the condition chosen by the fault state Type I/O option. It can be cleared by setting the **CLR_FSTATE** parameter. The set and clear parameters do not appear in a view because they are momentary.

Write Lock

The write protect jumper enables or disables write protection of parameters. Device data cannot be altered via the FOUNDATION Fieldbus interface when write protection is on. Similarly, device data can be altered when the write protect jumper is off. See *Setting the Write Protect Jumper, page 43*.

The **WRITE_LOCK** parameter shows the status of the write protect jumper. The following statuses are possible:

- LOCKED: The device data cannot be altered via the FOUNDATION Fieldbus interface.
- UNLOCKED: The device data can be altered via the FOUNDATION Fieldbus interface.

If write protection is disabled, the alarm priority specified in the **WRITE_PRI** parameter is checked before the status change is relayed to the host system. The alarm priority specifies the behavior in the event of an active write protection alarm **WRITE_ALM**.

Other Implemented Features

- The **CYCLE_TYPE** parameter is a bit string that defines the types of cycles that this resource can do. **CYCLE_SEL** allows the configurator to choose one of them.
- **MIN_CYCLE_T** is the manufacturer specified minimum time to execute a cycle. It puts a lower limit on the scheduling of the resource.
- The **MEMORY_SIZE** parameter declares the size of the resource for configuration of instantiable function blocks, in kilobytes.
- The **FREE_SPACE** parameter shows the percentage of configuration memory that is still available.
- **FREE_TIME** shows the approximate percentage of time that the resource has left for instantiating new function blocks, should they be available. There are only two AI blocks available for instantiation, for a total of 3 AI blocks.

Block Error

The **BLOCK_ERR** parameter reflects the following causes:

- Out-of-Service: When the Actual mode is Out of Service.
- Power Up: When a reset occurs and the Target Mode is not AUTO.
- Device Needs Maintenance Now: When there is an error detected in NV or Static memory.

  A reset will try to restore data from a backup copy, but if that is not successful, the device is set back to defaults.
- Lost NV Data and Lost Static Data: When the Target Mode is Out-of-Service since the last hard reset.
- Device Fault State Set: When **FAULT_STATE** is active.
- Simulate Active: When simulation jumper is installed (see *Setting the Simulate Jumper, page 44*).

Resource Block Field Diagnostics and Enhanced Parameters

Index	Name	Comments
42	FD_VER	This parameter represents the FF Field Diagnostic Specification version.
43	FD_FAIL_ACTIVE	These read-only parameters indicate Field Diagnostic Conditions that are mapped and detected.
44	FD_OFFSPEC_ACTIVE	
45	FD_MAINT_ACTIVE	
46	FD_CHECK_ACTIVE	
47	FD_FAIL_MAP	Field Diagnostic Conditions to be detected are mapped in one or more of these four categories.
48	FD_OFFSPEC_MAP	
49	FD_MAINT_MAP	
50	FD_CHECK_MAP	
51	FD_FAIL_MASK	Field Diagnostic Conditions that are active can be masked from being broadcast to a Host with these parameters.
52	FD_OFFSPEC_MASK	
53	FD_MAINT_MASK	
54	FD_CHECK_MASK	
55	FD_FAIL_ALM	Field Diagnostic Conditions that are active and not masked are broadcast to a Host through these parameters.
56	FD_OFFSPEC_ALM	
57	FD_MAINT_ALM	
58	FD_CHECK_ALM	
59	FD_FAIL_PRI	Field Diagnostic Conditions that are broadcast to a Host use the priority set in these associated parameters.
60	FD_OFFSPEC_PRI	
61	FD_MAINT_PRI	
62	FD_CHECK_PRI	
63	FD_SIMULATE	This parameter allows you to observe or simulate Field Diagnostic Conditions and test the functionality of the rest of the FD parameters.
64	FD_RECOMMEN_ACT	This parameter indicates a recommended course of action based on the condition(s) detected.

The Field Diagnostic (FD) group of parameters in the Resource block comply with the FOUNDATION Fieldbus implementation of the NAMUR NE 107 Specification. The following conditions are configurable in this device:

1	Sensor Board Bad Status
2	Sensor Board Comm Alert
3	Electronics Over Temperature
4	Electronics Under Temperature
5	Transducer block in Check condition

The conditions are defined the same for all Field Diagnostic parameters. For example, if the **Electronics Over Temperature** bit is set in the **FD_FAIL_MAP** parameter and the value of the electronics temperature (**FOURTH_VALUE** in the Transducer block) exceeds 85°C, then the **Electronics Over Temperature** bit is set by the instrument in the **FD_FAIL_ACTIVE** parameter. When the temperature is reduced, the **Electronics Over Temperature** bit is reset in the **FD_FAIL_ACTIVE** parameter.

FOUNDATION Fieldbus can communicate diagnostics to a host without the host having to poll or query the device. For example, the **Electronics Over Temperature** condition is sent to a host that is set up to receive Field Diagnostics without being queried when:

- The **Electronics Over Temperature** bit is set in the **FD_FAIL_ACTIVE** parameter
- The **Electronics Over Temperature** bit is *not* set in the **FD_FAIL_MASK** parameter, and
- The **FD_FAIL_PRI** has a value greater than 1.

The category to which an alarm condition is assigned depends on the host and the application where the instrument is installed. The FAIL category is generally expected to alert the plant operator, while the other categories (Maintenance, OffSpec, and Check) are recorded in a host maintenance log.

Sometimes the same condition may be assigned to multiple categories. Only failures in critical instrument roles are sent to an operator; for example, the failure of an instrument that plays only a minor role in a plant may only be a maintenance issue. The priority is set by the host design.

Additional Resource Block Enhanced Parameters

Index	Name	Description and Comments
65	SOFTWARE_REV	This parameter represents the software version of both the **FF MAU** and the **Sensor PWA**.
66	HARDWARE_REV	This parameter represents the hardware version of both the **FF MAU** and the **Sensor PWA**.
67	CAPABILITY_LEV	This parameter represents the transmitter's capability level defined as **CIF** for Control In the Field features.
68	COMPATIBILITY_REV	This parameter represents the backward compatibility level that is defined in reference to the **DEV_REV**.
69	RESERVED_IDX	Reserved
70	RESERVED_DATA	Reserved
71	BLOCK_ERR_DESC_1	Read-only parameter that displays further information for solving block errors: • Simulation permitted: Simulation is allowed due to activated hardware simulation switch. • Failsafe active: Failsafe mechanism in an AI block is active.

Transducer Block

The Transducer Block contains all of the manufacturer-specific parameters that define how the pressure transmitter functions. All of the settings directly connected with the application (pressure measurement) are made here. They form the interface between sensor-specific measured value processing and the Analog Input function blocks required for automation. Selections, such as setting of input type, engineering units, and so forth, are performed in this block. The Transducer Block allows you to select a large number of sophisticated functions. See *Transducer Block Parameters, page 173* for the full list of parameters.

A Transducer Block allows you to influence the input and output variables of a function block. The parameters of a Transducer Block include information on the sensor configuration, physical units, calibration, damping, error messages, as well as the device-specific parameters.

Alarm Detecting and Processing

The Transducer Block does not generate any process alarms. The status of the process variables is evaluated in the downstream Analog Input function blocks. If the Analog Input function block receives no input value that can be evaluated from the Transducer Block, then a process alarm is generated. This process alarm is displayed in the **BLOCK_ERR** parameter of the Analog Input function block (**BLOCK_ERR=** Input Failure).

The **BLOCK_ERR** parameter of the Transducer Block displays the device error that produced the input value that could not be evaluated and thus triggered the process alarm in the Analog Input function block.

Selecting the Units

The system units selected in the Transducer Blocks do not have any effect on the desired units that will be transmitted by means of the FOUNDATION Fieldbus interface. This setting is made separately via the corresponding AI Block in the **XD_ SCALE** parameter group. The unit selected in the Transducer Blocks is only used for the local display and for displaying the measured values within the Transducer Block in the configuration program in question.

Configuring Parameters in the Transducer Block

1. Open the Transducer Block. Put the block Out Of Service by setting **MODE_ BLK•Target** to OOS.
2. Set **PRIMARY_VALUE_RANGE•EU_100** and **PRIMARY_VALUE_RANGE•EU_ 0**, and set the **PRIMARY_VALUE_RANGE•UNITS_INDEX** to a pressure engineering unit, such as inH_2O or kg/cm^2 (see *Pressure Unit Names and Unit Codes, page 76*). This operation is called reranging the transmitter, and allows you to set the operating range (URV-LRV), which is limited to the sensor range (URL-LRL). A pressure outside of this range ±10% results in a blinking measurement on the display and a FOUNDATION Fieldbus status of Uncertain.
3. Set the **THIRD_VALUE_TYPE** to one of the following:
   - Pressure Linear: Pressure units.
   - Square Root < 1%: Square root flow calculation with cutoff below 1% of calibrated differential pressure range. (DP transmitters only.)
   - Square Root < 4%: Square root flow calculation with linear extrapolation below 4% of calibrated differential pressure range. (DP transmitters only.)
   - Square Root 0 - 20%: square root flow calculation with a user-configured cutoff specified between 0 and 20% of the flow upper range value, **M2EFAC**. The actual cutoff for this option is set in **THIRD_VALUE_FLOW_CUTOFF**. (DP transmitters only.)

NOTE:

- Cutoff in M2SQ<1C and M2SQ<4L is in percent of differential pressure, but cutoff in M2SQ<nC is in percent of flow rate.
- **THIRD_VALUE_TYPE** cannot be written as one of the flow selections if **PRIMARY_RANGE_VALUE•EU_0** is not zero. Thus, the order of configuring the parameters is important.

Example 1: To go from a 20 to 100 inH_2O pressure application to a 0 to 100 inH_2O flow application, set the **PRIMARY_RANGE_VALUE•EU_0** to zero and then set the **THIRD_VALUE_TYPE** to one of the flow selections.

Example 2: To go from a 0 to 100 inH_2O flow application to a 20 to 100 inH_2O pressure application, set the **THIRD_VALUE_TYPE** to pressure and then set the **PRIMARY_RANGE_VALUE•EU_0** to 20 inH_2O.

4. Set the **THIRD_VALUE_RANGE•UNITS_INDEX** to the desired units. Pressure units (see *Pressure Unit Names and Unit Codes, page 76*) are the same selection as **PRIMARY_VALUE_RANGE•UNITS_INDEX**, and may be configured the same or different.
5. The factory setting for **SENSOR_DAMPING** is **DAMP1/4** (0.25 second). If the process is noisy, increase the value in small increments, up to 32 seconds. Select one of the following numbers: 0.25, 0.50, 1, 2, 4, 8, 16, or 32.
6. Write the changes to the transmitter.

Table 13 - Pressure Unit Names and Unit Codes

Name	Code	Name	Code	Name	Code	Name	Code
Pa	1130	mbar	1138	kg/cm2	1145	ftH2O (4°C)	1153
MPa	1132	torr	1139	inH2O (4°C)	1147	ftH2O (68°F)	1154
kPa	1133	atm	1140	inH2O (68°F)	1148	inHg (0°C)	1156
hPa	1136	psi	1141	mmH2O (4°C)	1150	mmHg (0°C)	1158
bar	1137	g/cm2	1144	mmH20 (68°F)	1151		

Table 14 - Flow Unit Names and Unit Codes

Name	Code	Name	Code	Name	Code	Name	Code
g/s	1318	lb/d	1333	L/h	1353	ImpGal/min	1368
g/min	1319	STon/min	1335	ML/d	1355	ImpGal/h	1369
g/h	1320	STon/h	1336	CFS	1356	ImpGal/d	1370
kg/s	1322	STon/d	1337	CFM	1357	bbl/s	1371
kg/min	1323	LTon/h	1340	CFH	1358	bbl/min	1372
kg/h	1324	LTon/d	1341	ft3/d	1359	bbl/h	1373
kg/d	1325	%	1342	SCFM	1360	bbl/d	1374
t/min	1327	m3/s	1347	gal/s	1362	Nm3/h	1524
t/h	1328	m3/min	1348	GPM	1363	Sm3/h	1529
t/d	1329	m3/h	1349	gal/h	1364	NL/h	1534
lb/s	1330	m3/d	1350	gal/d	1365	MSCFD	1598
lb/min	1331	L/s	1351	Mgal/d	1366	MMSCFD	1599
lb/h	1332	L/min	1352	ImpGal/s	1367		

Analog Input (AI) Block

In the Analog Input (AI) function block, the process variables of the Transducer Blocks are prepared for subsequent automation functions (for example, linearization, scaling, and limit value processing). The automation function is defined by connecting the outputs. The AI block takes the transducer process variables, selected by channel, and makes it available to other function blocks at its output.

The transmitter has three AI blocks:

- Analog Input block 1 is always instantiated.
- Analog Input blocks 2 and 3 can be instantiated, meaning that the blocks are present; or deinstantiated, meaning that the blocks are removed from the device. By default, both are instantiated.

  You can deinstantiate either or both blocks, but a block must be in the Out of Service mode in order to deinstantiate it. Additionally, if both blocks are deinstantiated, then AI block 2 must be re-instantiated first.

  You can use the DTM to instantiate or deinstantiate AI blocks 2 and 3. Refer to the FOUNDATION Fieldbus specifications for how Action Objects are used to instantiate and deinstantiate blocks.

Figure 49 - Analog Input Block Schematic

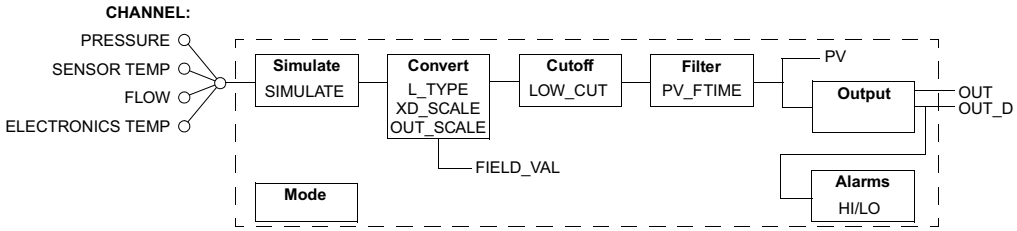

Transducer scaling (**XD_SCALE**) is applied to the value from the channel to produce the **FIELD_VAL** in percent. The **XD_SCALE** units must match the transducer process variable selected by the **CHANNEL** parameter, or an error message is generated. The range does not have to match.

The **OUT_SCALE** is normally the same as **XD_SCALE**, but if **L_TYPE** is set to **Indirect** (DP transmitters only), **OUT_SCALE** determines the conversion from **FIELD_VAL** to the output.

OUT_SCALE provides scaling for **PV**. The PV is always the value that the block places in **OUT** if the mode is Auto. If **Man** is allowed, you can write a value to the output. The status helps prevent any attempt at closed loop control using the **Man** value, by setting the Limit value to Constant.

The **LOW_CUT** parameter is primarily used for flow, and has a corresponding “Low cutoff” option in the **IO_OPTS** bit string. A value of zero may be used in the **LOW_CUT** parameter with the “Low Cutoff” option set in the **IO_OPTS** parameter. This helps prevent slight negative values of the process measurement from propagating to the **OUT** parameter of the AI block and causing an Uncertain status because the **OUT_SCALE** range lower limit of zero was exceeded. This feature can help eliminate signal noise near zero from a flow or pressure sensor. **PV_FTIME** represents the filter time constant for the PV in seconds.

FIELD_VAL = 100 x (channel value - EU@0%) / (EU@100% - EU@0%) [**XD_SCALE**]

Direct: PV = channel value

Indirect: PV = (**FIELD_VAL**/100) x (EU@100% - EU@0%) + EU@0% [**OUT_SCALE**]

Ind Sqr Root: PV[40] = sqrt(**FIELD_VAL** / 100) x (EU@100% - EU@0%) + EU@0% [**OUT_SCALE**]

40. DP transmitters only.

Refer to *Analog Input (AI) Block Parameters, page 181* for details about the AI parameters.

Supported Modes

OOS, Man, and Auto.

Alarm Types

Standard block alarms plus HI_HI, HI, LO, and LO_LO alarms applied to **OUT** and **OUT_D**.

Alarm Output

The **OUT_D** parameter is a discrete output whose value is defined by the process alarms in the AI block. When one or more of the AI process alarms (HI_HI, HI, LO, LO_LO) are configured to alarm in response to the value of OUT exceeding the alarm limit set in the corresponding **_LIM** parameter, and if the configuration parameter **OUT_D_SEL** has configured **OUT_D** to be associated with that alarm, the **OUT_D** value is set to 1. Otherwise, the value is 0.

Status Handling

The status values described in Output parameter Formal Model of Part 1 apply, with the exception of the control substatus values. The Uncertain - EU Range Violation status is always set if the **OUT** value exceeds the **OUT_SCALE** range and no worse condition exists.

The following options from **STATUS_OPTS** apply, where Limited refers to the sensor limits:

- Propagate Fault Forward
- Uncertain if Limited
- BAD if Limited
- Uncertain if Man mode

Configuring Parameters in the AI Block

1. Open the AI Block. Put the block Out Of Service by setting **MODE_BLK•Target** to **OOS**.
2. Set the **CHANNEL** parameter to one of the following:

Channel Number	Channel Parameter	Transducer Block Value Used by AI Block
1	Pressure	Primary Value
2	Sensor Temperature	Secondary Value (Transmitter Temperature)
3	Flow	Third Value
4	Electronics Temperature	Fourth Value

NOTE: The Sensor Temperature is the temperature inside the pressure sensor. It is used for compensation purposes. It may not be equal to the ambient temperature. It is definitely not the process temperature; do not use it for control purposes.

3. Write the changes to the transmitter.
4. Set the **XD_SCALE**, **L_TYPE**, and **OUT_SCALE** parameters:

- **XD_SCALE**, used with **L_TYPE**, converts the I/O channel value to a percent of scale.
- **FIELD_VAL** is the measurement in percent of **XD_SCALE**.
- **L_TYPE** is the linearization type used to convert the value to the block output.
- **OUT_SCALE**, also used with **L_TYPE**, converts percent of scale to the output value (**OUT**).

a. If **CHANNEL** is set for Pressure:
   - Set the **XD_SCALE•UNITS_INDEX** exactly the same as the **PRIMARY_VALUE_RANGE•UNITS_INDEX**.
   - Set the **XD_SCALE** range to the desired range. It does not have to match the **PRIMARY_VALUE_RANGE** values.
   - Set the **OUT_SCALE** parameters:
     - If **L_TYPE** is Direct: Set the **OUT_SCALE** parameters to match those of the **XD_SCALE**.
     - If **L_TYPE** is Indirect: Set the **OUT_SCALE** parameters at the desired unit and values. See the example at the end of this step.
     - If **L_TYPE** is Indirect Sq Rt:[41] Set the **OUT_SCALE** to **%** (for % flow).

b. If **CHANNEL** is set for Sensor Temperature:
   - Set the **XD_SCALE•UNITS_INDEX** to °C.
   - Set the **XD_SCALE** range to the desired range.
   - Set the **OUT_SCALE** parameters:
     - If **L_TYPE** is Direct: Set the **OUT_SCALE** parameters to match those of the **XD_SCALE**.
     - If **L_TYPE** is Indirect: Set the **OUT_SCALE** parameters at the desired unit and values. See the example at the end of this step.
     - If **L_TYPE** is Indirect Sq Rt: Not applicable.

c. If **CHANNEL** is set for Flow:
   - If **THIRD_VALUE_TYPE** is Pressure Linear:
     - Set the **XD_SCALE•UNITS_INDEX** exactly the same as the **THIRD_VALUE_RANGE•UNITS_INDEX**.
     - Set the **XD_SCALE** range to the desired range. It does not need to match the **THIRD_VALUE_RANGE** values.
     - Set the **OUT_SCALE** parameters:
       - If **L_TYPE** is Direct (for output in pressure units): Set the **OUT_SCALE** parameters to match those of the **XD_SCALE**.
       - If **L_TYPE** is Indirect (for output in scaled pressure units): Set the **OUT_SCALE** parameters at the desired pressure unit and values. See the example at the end of this step.
       - If **L_TYPE** is Indirect Sq Rt[41] (for output in flow units): Set the **OUT_SCALE** parameters at the desired flow unit and values. See the example at the end of this step.
   - If **THIRD_VALUE_TYPE** is Flow:
     - Set the **XD_SCALE•UNITS_INDEX** exactly the same as the **THIRD_VALUE_RANGE•UNITS_INDEX** (%).
     - Set the **XD_SCALE** range to the desired range. It does not need to match the **THIRD_VALUE_RANGE** values.
     - Set the **OUT_SCALE** parameters:

41. Applies to DP transmitters only.

- If **L_TYPE** is Direct: Set the **OUT_SCALE** parameters to match those of the **XD_SCALE**.
- If **L_TYPE** is Indirect: Set the **OUT_SCALE** parameters at the desired unit and values. See the example at the end of this step.
- If **L_TYPE** is Indirect Sq Rt: Not applicable.

d. If **CHANNEL** is set for Electronics Temperature:

- Set the **XD_SCALE•UNITS_INDEX** to °C.
- Set the **XD_SCALE** range to the desired range.
- Set the **OUT_SCALE** parameters:
  - If **L_TYPE** is Direct: Set the **OUT_SCALE** parameters to match those of the **XD_SCALE**.
  - If **L_TYPE** is Indirect: Set the **OUT_SCALE** parameters at the desired unit and values. See the example at the end of this step.
  - If **L_TYPE** is Indirect Sq Rt: Not applicable.

Example of Using Indirect L_TYPE

To output sensor temperature from 0 to 100°C in °F:

- Set the **XD_SCALE•UNITS_INDEX** to °C.
- Set the **XD_SCALE•EU_100** to 100, **XD_SCALE•EU_0** to 0, and **UNITS_INDEX** to °C.
- Set the **L_TYPE** as Indirect.
- Set the **OUT_SCALE•EU_100** to 212, **OUT_SCALE•EU_0** to 32, and **UNITS_INDEX** to °F (the equivalent values in °F for 100°C and 0°C).

5. Put the AI Block in Auto mode. Make sure the **MODE_BLK•ACTUAL** reads **Auto**.
6. Write the changes to the transmitter.

Display Block

The Display Block allows you to show up to four process variables labeled as A, B, C, or D in addition to M1 and M2 on the optional local display. You can configure the display to rotate among these four values. The transmitter displays each value for a fixed number of seconds before displaying the next value. Depending on the value selected and its status, the corresponding units will also appear on the display.

The Display block functionality is split between the Multiple Analog Output (MAO) block and the Pressure Transducer block.

The MAO block provides a location to link up to eight external process variables into the instrument through the parameters **IN_1** through **IN_8**. The remainder of the parameters in the MAO block are not used.

In the Pressure Transducer block, there are four parameters, **PV_DISPLAY_SETUP_A** through **PV_DISPLAY_SETUP_D**, which allow up to four process variables to be displayed as A, B, C, and D in the bottom right corner of the optional local display. The **PV_DISPLAY_SETUP_x** parameter is used to associate the displayed process variable to the configuration. You can select **IN_1** through **IN_8** or the **OUT** parameter from one of the three AI blocks, or the **OUT** parameter from the PID block, to be the process variable displayed on the optional local display. You must also specify a unit label of up to 6 characters and the number of decimal places for the process variable in the **PV_DISPLAY_SETUP_x** parameter. If the process variable's status is good, then only the selected process variable's unit label will appear on the local display. However, if the status is not good, the status will be shown in place of the unit label.

Refer to *Display (MAO) Block Parameters, page 180*.

PID Block

A PID block contains the input channel processing, the proportional integral differential control (PID), and the analog output channel processing. The configuration of the PID function block depends on the automation task. The PID block can carry out basic controls, feedforward control, cascade control, and cascade control with limiting.

Refer to *PID Block Parameters, page 189* for details.

Figure 50 - PID Block Parameter Summary

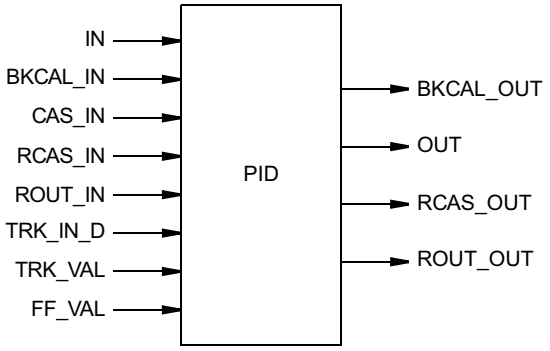

Figure 51 - PID Block Schematic

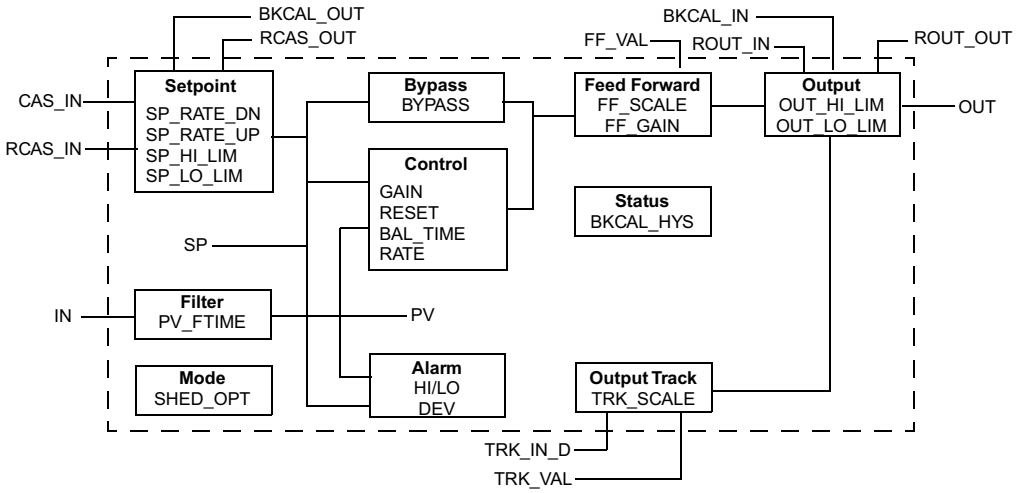

The process value to be controlled is connected to the **IN** input. This value is passed through a filter whose time constant is **PV_FTIME**. The value is then shown as the **PV**, which is used in conjunction with the **SP** in the PID algorithm. A PID does not integrate if the limit status of **IN** is constant. A full PV and DV alarm subfunction is provided. The PV status is a copy of the **IN** status unless **IN** is good and there is a PV or block alarm.

The full cascade SP subfunction is used with rate and absolute limits. There are additional control options which cause the **SP** value to track the **PV** value when the block is in an actual mode of **IMan**, **LO**, **Man**, or **Rout**. Limits do not cause SP-PV tracking.

There is a switch for **BYPASS**, which is available to the operator if the Bypass Enable control option is true. **BYPASS** is used in secondary cascade controllers that have a bad PV. The Bypass Enable option is necessary because not all cascade control schemes are stable if **BYPASS** is true. **BYPASS** can only be changed when the block mode is **Man** or **OOS**. While it is set, the value of **SP**, in percent of range, is passed directly to the target output, and the value of **OUT** is used for **BKCAL_OUT**. When the mode is changed to **Cas**, the upstream block is requested to initialize to the value of **OUT**. When a block is in **Cas** mode, then on the transition out of **BYPASS**, the

upstream block is requested to initialize to the PV value, regardless of the “Use PV for **BKCAL_OUT**” option.

GAIN, **RESET**, and **RATE** are the tuning constants for the P, I, and D terms, respectively. **GAIN** is a dimensionless number. **RESET** and **RATE** are time constants expressed in seconds. There are existing controllers that are tuned by the inverse value of some or all of them, such as proportional band and repeats per minute. The human interface to these parameters should be able to display your preference. The Direct Acting option of the **CONTROL_OPT**S parameter, if true, causes the output to increase when the **PV** exceeds the **SP**. If false, the output decreases when the **PV** exceeds the **SP**. It makes the difference between positive and negative feedback, so it must be set properly and never changed while in automatic mode. The setting of the option must also be used in calculating the limit state for **BKCAL_OUT**.

The output supports the feed-forward algorithm. The **FF_VAL** input brings in an external value which is proportional to some disturbance in the current loop. The value is converted to percent of output span using the values of parameter **FF_SCALE**. This value is multiplied by the **FF_GAIN** and added to the target output of the PID algorithm. If the status of **FF_VAL** is **Bad**, the last usable value is used because this prevents bumping the output. When the status returns to **Good**, the block adjusts its integral term to maintain the previous output.

The output supports the track algorithm through **TRK_VAL**, **TRK_IN_D**, and **TRK_SCALE**.

There is an option to use either the SP value after limiting or the PV value for the **BKCAL_OUT** value.

Auto Tune in the PID Block

The Auto Tune feature of the PID block can determine unique customer process characteristics by making small bumps to the value of the **OUT** parameter in the PID block and measuring the response at the **IN** parameter. This procedure is usually performed using the DTM interface.

Figure 52 - PID Block Auto Tune Feature

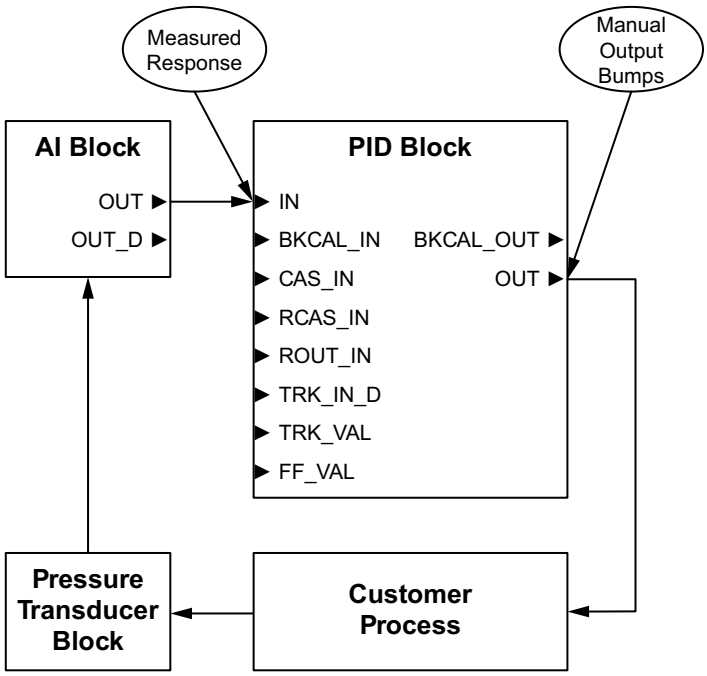

1. Make sure the PID block’s mode is set to **MAN** and that the block was scheduled and configured by the host so that the **OUT** parameter is affecting the real process.

2. Configure the **AUTO_TUNE** parameter in the PID block with the magnitude of the bump of the **OUT** parameter and the threshold that is expected at the **IN** parameter in response to this bump.

Through the **AUTO_TUNE** parameter, the tuning process is started and monitored. If a successful cycle is completed, it has a status of **Done**.

The **AUTO_TUNE** parameter then contains several timing measurements that the DTM can use to determine the optimal setting of the parameters **GAIN**, **RESET**, **BAL_TIME**, **SP_LAG**, **KDERIV**, and **RATE** which is used by the PID block in **AUTO** mode.

The **AUTO_TUNE** function is recommended for only the **PI** (4), **PID** (5), and **NIPID** (6) settings of the **PID_TYPE** parameter which selects the algorithm used in the PID block.

Supported Modes

OOS, IMan, LO, Man, Auto, Cas, RCas, and Rout.

Alarm Types

Standard block alarm, plus standard **HI_HI**, **HI**, **DV_HI**, **DV_LO**, **LO**, and **LO_LO** alarms applied to **PV**.

Status Handling

Standard, plus the following things for the control selector. If **Not Selected** is received at **BKCAL_IN**, the PID algorithm should make necessary adjustments to help prevent windup.

Disabling the Link Active Scheduler (LAS)

Enable or disable the LAS by writing to the **BOOT_OPERAT_FUNCTIONAL_CLASS** parameter in the Network Management Virtual Field Device (VFD) of the device. A value of 1 sets a Basic device; a value of 2 sets a LAS device. Cycle the power to the device after changing this parameter.

NOTICE

POTENTIAL REDUCED PERFORMANCE

- Modifying the parameters in the Network or System Management VFD of the device can have adverse effects on data throughput rates. If settings are incorrectly modified, some devices may disappear from the network.
- Do not modify the parameters in the Network or System Management VFD of the device without good reason. If you must modify parameters for certain transmitters, contact Global Customer Support for recommended settings.
- The Network or System Management parameters are located in the Advance settings of National Instruments™ configurator software.

Failure to follow these instructions can result in minor injury or equipment damage.

NOTE:

If more than one device has the LAS feature configured on, the LAS is applied to the devices in the order of their Node Address. Therefore, take LAS into consideration when selecting the Node Address.

As a prudent measure, it is recommended that you configure multiple devices (two or more) on the bus as link master devices.

Upgrading the Firmware

These transmitters feature the ability to upgrade the internal firmware remotely through the FOUNDATION Fieldbus wiring. A host must have this feature implemented per FOUNDATION Fieldbus specifications. It is not a DD or DTM operation.

- The upgrade process may take several minutes.
- The transmitter remains fully functional while firmware is downloaded.
- Once the firmware is downloaded, the transmitter activates the firmware, the instrument goes offline to complete the upgrade, and the optional local display shows the progress.
- Once the upgrade is complete, the transmitter comes back online and requires reconfiguration to resume operation.

The same firmware file may also be installed locally at the transmitter. Contact Global Customer Support for assistance.

Calibration

You can calibrate the transmitter by accessing the menu system using the **ENTER** and **NEXT** buttons on the optional local display, by using the optional external zero button, or by using a remote configurator.

FoxCal™ Multiple Calibration Technology

% Reading Accuracy

Transmitters in the Advanced (10S) and Premium (50S) performance tiers offer FoxCal™ technology, a patented multiple calibration feature that helps eliminate the need for a traditional single-span calibration at an application-specific pressure range. Transmitters with the FoxCal™ feature enabled use multiple calibrated ranges that are stored in on-board memory. The calibrated ranges are preset in the factory and cover the full pressure range of the transmitter. During operation, a real-time, seamless transition from one factory-calibrated range to another maintains digital accuracy as a percent of reading from 100% to as low as 4% of the upper range limit (URL) (**SENSOR_RANGE•EU_100**).

% URV Accuracy

The FoxCal™ feature also supports % URV accuracy. Factory calibration and field calibration for specific applications are not required for zero-based ranges up to 30:1 turndown. Simply configure the URV (**PRIMARY_VALUE_RANGE**) without performing a recalibration at the URV (**PRIMARY_VALUE_RANGE**). You will only need to perform a zero adjustment after installation to obtain performance to the specified reference accuracy.

Refer to *Span and Range Limits, page 12*.

Enabling and Disabling FoxCal™

The transmitter can be shipped with or without the FoxCal™ feature enabled. If you select the -C1 option in the model code, FoxCal™ is not enabled, and the transmitter is factory calibrated over the specified range. If you do not select the -C1 option in the model code, FoxCal™ is enabled.

The FoxCal™ calibration feature can be enabled or disabled by selecting **FOXCAL** from the **CALIB** menu on the LCD and selecting **FCALON** or **FCALOFF**, or use the **FOXCAL_CONTROL** parameter.

When FoxCal™ is disabled, the last two-point calibration is enabled. As shipped, the last two-point calibration defaults to a calibration from 0 to URL; or, for transmitters ordered with the -C1 option, the two-point Custom Factory Calibration range. If a two-point field calibration is performed later, the last calibration becomes the last field calibration.

If you perform a two-point calibration on a transmitter with FoxCal™ enabled, the new calibration is used, and FoxCal™ is disabled. Re-enable FoxCal™ by selecting **FOXCAL** from the **CALIB** menu and selecting **FCALON**, or use the **FOXCAL_CONTROL** parameter.

NOTICE

POTENTIAL REDUCED PERFORMANCE

When disabling FoxCal™, the last two-point calibrated range may not match the current configuration of the Lower Range Value and Upper Range Value. For optimal performance, avoid large mismatches.

Failure to follow these instructions can result in reduced performance.

One-Point Calibration at LRV

A one-point offset calibration at LRV (**CAL_POINT_LO**) can be performed with either FoxCal™ or the last two-point calibration enabled.

When a one-point calibration at LRV is performed, the offset adjustment applies to both the last two-point calibration and all the multiple calibrations. The calibrated accuracy at the LRV point is adjusted and maintained for both calibrations, regardless of which selection is enabled at the time of the adjustment. This allows you to enable or disable FoxCal™ without also performing two independent offset adjustments.

Two-Point Field Calibration

The transmitters, including those shipped with the FoxCal™ feature enabled, can be recalibrated to a specific LRV and URV (**PRIMARY_VALUE_RANGE**).

NOTE: The calibration at the LRV point applies to transmitters with the FoxCal™ feature enabled as well as transmitters calibrated with a two-point calibration. However, the calibration at the URV point applies only to the two-point calibration. Multiple calibrations stored in the transmitter in the factory do not change when a URV calibration is performed. Instead, as with a custom factory calibration, a field calibration at URV automatically disables the FoxCal™ feature and enables a single two-point calibration.

NOTICE

POTENTIAL REDUCED PERFORMANCE

The accuracy of the input pressure for field span calibration should be a minimum of four times better than the transmitter's reference accuracy specification. An inaccurate span pressure input typically results in degradation of transmitter performance from the factory calibrated state.

Failure to follow these instructions can result in reduced performance.

Calibration Notes

- If you perform a two-point calibration when the FoxCal™ feature is enabled, the new calibration is used and FoxCal™ is disabled.
- For best results in applications where high accuracy is required, rezero the transmitter output once it has stabilized at the final operating temperature.
- Zero shifts resulting from position effects can be eliminated by rezeroing the transmitter output.
- (DP transmitters only) When checking the zero reading of a transmitter operating in the square root mode, return the output to the linear mode. This eliminates an

apparent instability in the output signal. Return the transmitter output to the square root mode after the zero check is complete.

- The internal digital value of pressure can be shown on the optional local display and transmitted digitally.
- The transmitter database has configurable values for both lower range value (LRV) and upper range value (URV) (FF parameter **PRIMARY_VALUE_ RANGE**). You can display the LRV and URV in pressure units by selecting the **RERANGE** function on the LCD. These values are used for two functions:
  - Defining the calibrated range when using the pushbuttons for calibration:
    - When either **CAL LRV** or **CAL URV** is initiated from the pushbuttons, the transmitter expects that the pressure applied at the time the button is pressed is equal to the LRV or URV value, respectively.
    - This function trims the internal digital value of pressure; that is, it performs a calibration based on the application of accurate pressures equal to the values entered for LRV and URV in the transmitter database.
  - Reranging without the application of pressure:
    - The transmitter continually determines an internal digital value of the measured pressure from the lower range limit (LRL) to the upper range limit (URL) (FF parameter **SENSOR_RANGE**) without application of pressure.
    - The reranging function is accomplished by entering new database values for LRV and URV (FF parameter **PRIMARY_VALUE_RANGE**).
    - Reranging does not affect the calibration of the transmitter; that is, it does not affect the optimization of the internal digital value of pressure over the calibrated range.
    - If FoxCal™ is disabled and the reranged LRV and URV (FF parameter **PRIMARY_VALUE_RANGE**) are not within the calibrated range, the measured values may not be as accurate as when they are within the calibrated range.
- (DP transmitters only) If the transmitter is in square root mode for flow rate measurement, the URV in the database is displayed as the flow rate URV when the view database (**VIEW DB**) function is used. However, the LRV and URV in pressure units can be displayed by selecting the **RERANGE** function. LRV is always zero when the transmitter is configured for square root mode.
- When the local display is used, the internal digital value of pressure is sent directly to the display.
  - The display can show any measured pressure in selected units regardless of the calibrated range and the values of LRV and URV (within the limits of the transmitter and display).
  - If the measured pressure is outside the range established by the LRV and URV values in the database, the display shows the measurement but also continually blinks to indicate that the measurement is out of range. The signal is saturated at either the low or high overrange limit, respectively, but the display continually shows the pressure.
- Zeroing from the local display does not affect the span.

  When the transmitter is zeroed to compensate for installed position effect, the transmitter can have either LRV pressure applied (**CAL LRV**) or zero pressure applied (**CAL AT0**). If the range is zero-based, either method produces the same result. However, if the range is not zero-based, it is advantageous to have both methods available.

  For example, consider a pressure transmitter having a range of 50 to 100 psig. If it is not feasible to vent the transmitter to atmosphere (or bypass the high and low sides) for zeroing, it can be adjusted while the LRV pressure of 50 psi is applied by using the **CAL LRV** function on the LCD or the FOUNDATION Fieldbus parameter **CAL_POINT_LO**.

On the other hand, if the transmitter has been installed but there is no pressure in the process line yet (or if the high and low sides can be connected by a bypass valve), it can be zeroed while open to atmosphere by using the **CAL AT0** function on the LCD or the FOUNDATION Fieldbus parameter **CAL_AT_ZERO**.

- Zeroing with LRV pressure applied (**CAL LRV** or FF parameter **CAL_POINT_LO**):
  - Before using this zeroing function, apply a pressure to the transmitter equal to the value of LRV stored in the transmitter database.
  - When you zero the transmitter, the internal digital value of the pressure is trimmed to be equal to the value of LRV stored in the database.
  - If zeroing is done when the applied pressure is different from the LRV pressure value in the database, the internal digital value of pressure is biased by the difference in the values.
  - Use the **CAL LRV** (FF parameter **CAL_POINT_LO**) and **CAL URV** (FF parameter **CAL_POINT_HI**) functions when calibrating a transmitter for a specific range with known input pressures applied for the LRV and URV. FoxCal™ is automatically disabled by the **CAL URV** (FF parameter **CAL_POINT_HI**) function.
- Zeroing a gauge or differential pressure transmitter with zero pressure applied (**CAL AT0** or FF parameter **CAL_AT_ZERO**)[42]:
  - Make sure that the applied pressure is at zero. This means venting the transmitter to atmosphere, or opening a bypass valve to connect the high and low sides.
  - When you zero the transmitter, the internal digital value of the pressure is trimmed to be equal to zero.
- Zeroing an absolute pressure transmitter: Temporarily set the LRV to the barometric pressure, and perform a **CAL LRV** (FF parameter **CAL_POINT_LO**) function with the transmitter vented to atmosphere. Then, set the LRV back to the proper value.

Calibration Setup

The following sections show setups for field and bench calibration. Use test equipment that is at least four times as accurate as the specified accuracy of the transmitter; otherwise, measurement inaccuracy may be introduced.

NOTICE

POTENTIAL REDUCED PERFORMANCE

For both field calibration and bench calibration procedures, using a pressure source that is less accurate than the transmitter's reference accuracy specification typically results in degradation of transmitter performance from the factory calibrated state. The accuracy of the input pressure should be a minimum of four times better than the transmitter's reference accuracy specification.

Failure to follow these instructions can result in reduced performance.

NOTE: Calibration is not necessary to rerange the transmitter to a different range. You can accurately rerange the transmitter by changing the lower and upper range values, which are stored in the transmitter database.

42. The **CAL AT0** function is not applicable with an absolute pressure transmitter. If an absolute pressure transmitter is vented to atmosphere, it does not have zero pressure applied. Instead, it has barometric pressure applied (approximately 14.7 psia at sea level).

Field Calibration Setup

Field calibration is performed without disconnecting the process piping. If the transmitter is to be removed from the process for calibration, see *Bench Calibration Setup, page 91*.

An adjustable air supply and a pressure measuring device are required. For example, a dead weight tester or an adjustable clean air supply and pressure gauge can be used.

Field Calibration — Direct Connect AP and GP Transmitters

Field calibration is possible only if the transmitter is piped as shown in the diagram.

Figure 53 - Field Calibration Setup for Direct Connect Transmitters

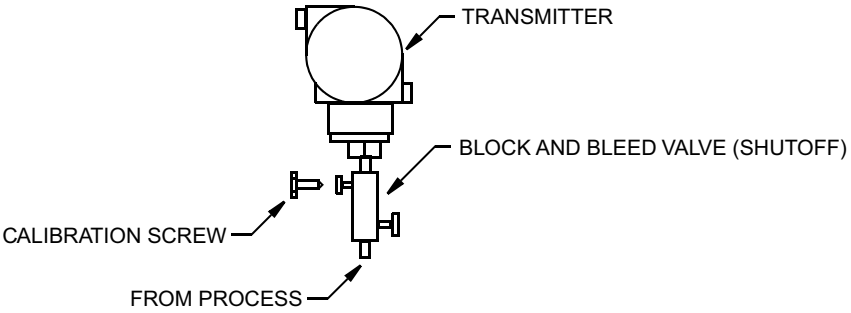

Block and Bleed Valve Maximum Pressure:

- 40 MPa (6000 psi) at 38°C (100°F)
- 25 MPa (4000 psi) at 250°C (400°F)

Calibration Screw Maximum Pressure:

- 0.7 MPa (100 psi) with Poly-Flo Fitting (F0101ES)

Field Calibration — Biplanar AP and GP Transmitters

Field calibration is possible only if you have a shutoff valve between the process and the transmitter, and the process covers vent screw option (-V1).

The pressure source can be connected to the transmitter with pipe fittings, or it can be connected to the vent screw assembly using a calibration screw. The calibration screw has a PolyFlo fitting and can be used for pressures up to 700 kPa (100 psi). It is available as Part Number F0101ES.

To set up the equipment, refer to the diagram and the following procedure:

Figure 54 - Field Calibration Setup for Biplanar Transmitters

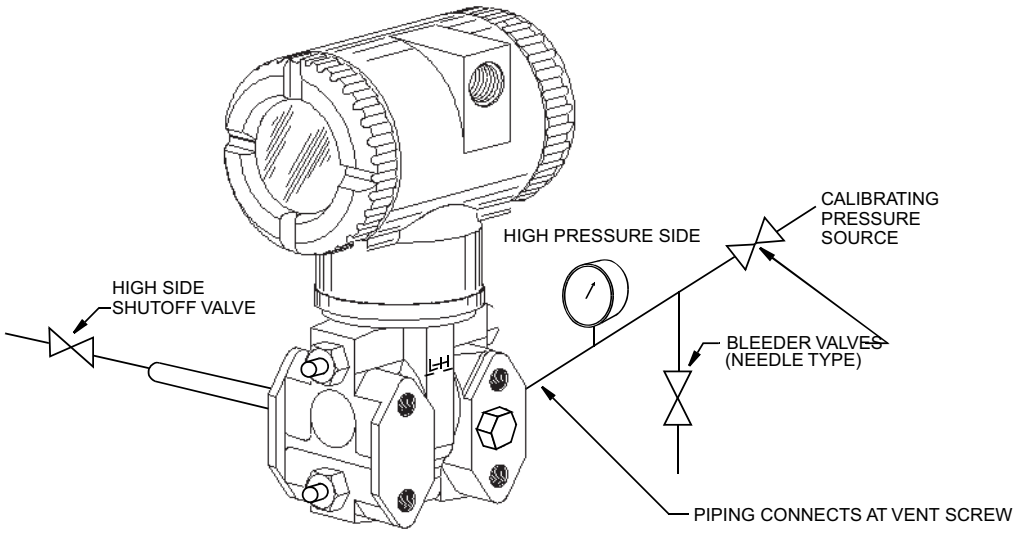

1. Close the shutoff valve between the process and the transmitter.
2. Take the appropriate step:
   a. If a calibration screw **is** being used, remove the vent screw and replace it with the calibration screw. Connect the pressure source to the calibration screw using 6 x 1 mm or 0.250 inch tubing.
   b. If a calibration screw is **not** being used, remove the drain plug or the entire vent screw assembly (as applicable) from the high pressure side of the transmitter. Connect calibration tubing using a suitable thread sealant.

Field Calibration — DP Transmitters

Field calibration is possible only if you have a bypass and shutoff valves between the process and the transmitter, and one of the following:

- Access to the process connections on the nonprocess side of the transmitter
- The optional vent screw in the side of the process covers

The pressure source can be connected to the transmitter with pipe fittings, or it can be connected to the vent screw assembly using a calibration screw. The calibration screw has a PolyFlo fitting and can be used for pressures up to 700 kPa (100 psi). It is available as Part Number F0101ES.

To set up the equipment, refer to the diagram and the following procedure:

Figure 55 - Field Calibration Setup for DP Transmitters

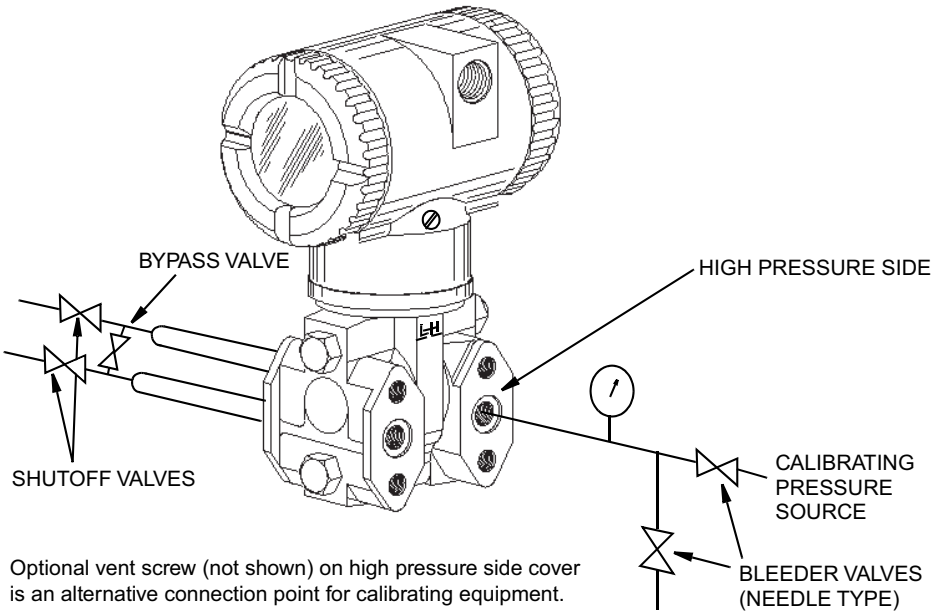

1. If the transmitter is in operation, follow the steps described in *Taking a Differential Pressure Transmitter out of Operation, page 50*.

NOTICE
POTENTIAL REDUCED PERFORMANCE With liquid service, drain both sides of the transmitter to avoid calibration errors. **Failure to follow these instructions can result in reduced performance.**

2. Take the appropriate step:
   a. If a calibration screw **is** being used, remove the vent screw and replace it with the calibration screw. Connect the pressure source to the calibration screw using 6 x 1 mm or 0.250 inch tubing.
   b. If a calibration screw is **not** being used, remove the drain plug or the entire vent screw assembly (as applicable) from the high pressure side of the transmitter. Connect calibration tubing using a suitable thread sealant.
3. Close the bypass valve that was opened in Step 1.
4. Complete the setup shown in the diagram.

   NOTE: For vacuum applications, connect the calibrating pressure source to the low pressure side of the transmitter.

Bench Calibration Setup

Bench calibration requires disconnecting the process piping. For calibration without disconnecting the process piping, see *Field Calibration Setup, page 89*.

For DP transmitters and biplanar AP and GP transmitters, connect the input piping to the high pressure side of the transmitter. Vent the low pressure side of the transmitter.

NOTE: For vacuum applications, connect the calibrating pressure source to the low pressure side of the transmitter.

See the following diagrams for the correct setup for each transmitter type.

Figure 56 - Bench Calibration — Direct Connect AP and GP Transmitters

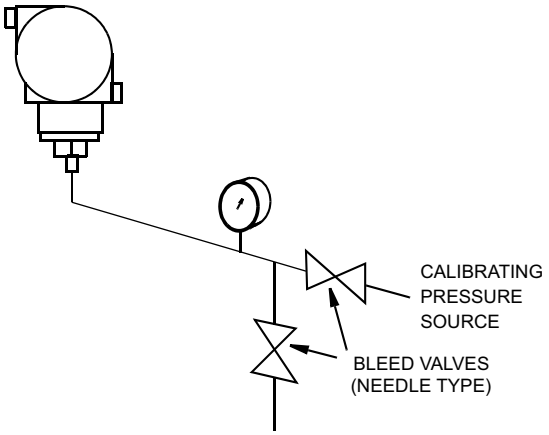

Figure 57 - Bench Calibration — Biplanar AP and GP Transmitters

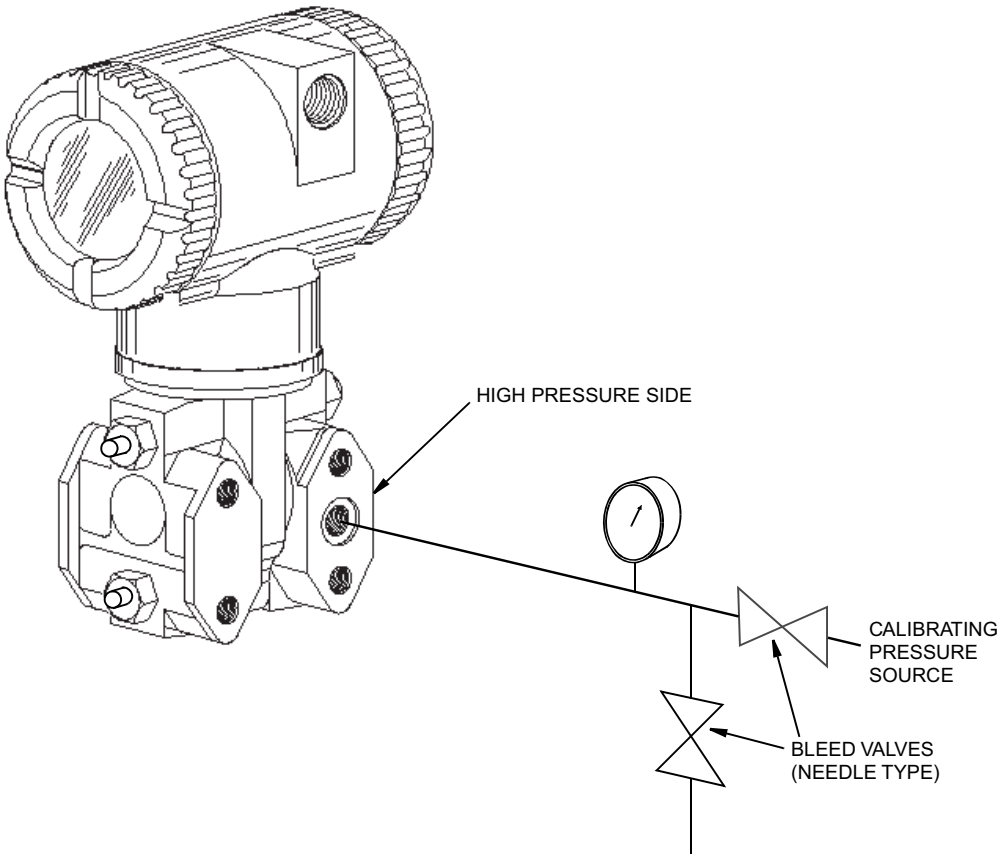

Figure 58 - Bench Calibration — DP Transmitters

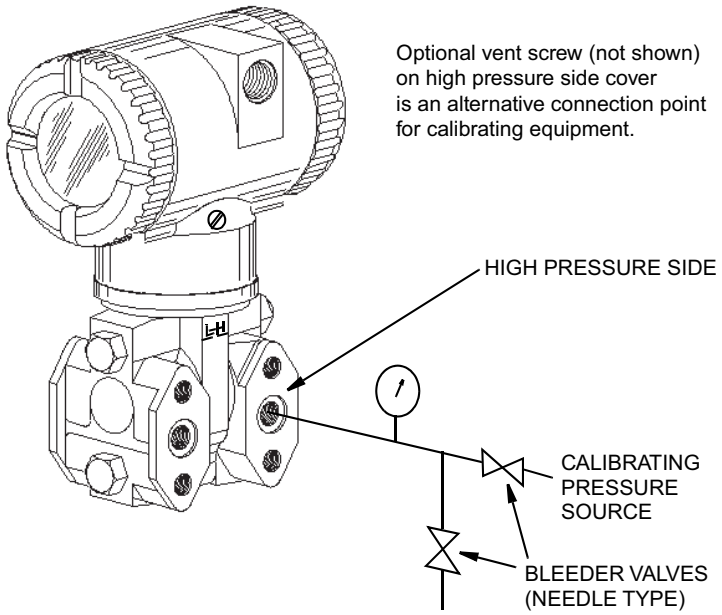

Calibration Using the Optional Local Display

From the display, you can:

- Zero the transmitter at zero pressure
- Calibrate the lower range value (LRV or 0% range value)
- Calibrate the upper range value (URV or 100% range value)
- Rerange your transmitter by adjusting the 0% and 100% range values

To access calibration mode from normal operating mode, press the **NEXT** button repeatedly until the display reads **CALIB**. Press the **ENTER** button to select **CALIB**. The display shows the first item in the Calibration menu.

NOTE:

- During calibration, a single change could affect several parameters. For this reason, if you make a mistake, review the entire database. Or, use the **CANCEL** feature to restore the transmitter to its starting configuration and begin again.
- If your transmitter is write protected, you cannot write your calibration to the electronics without disabling write protection.
- If calibration has been configured as password protected, you are prompted to enter the password before you can proceed.
- Before doing a **CAL AT0**, **CAL LRV**, or **CAL URV** (FOUNDATION Fieldbus parameters**CAL_AT_ZERO**, **CAL_POINT_LO**, **CAL_POINT_HI**) calibration, check your **M1_LRV** and **M1_URV** values to make sure that they are the proper 0% and 100% range values for your application. If not, use the **NEXT** button to go to **RERANGE** to set the correct **M1_URV** and **M1_LRV** (FF **PRIMARY_VALUE_RANGE•EU_100** and FF **PRIMARY_VALUE_ RANGE•EU_0**). Save these changes.

Proceed to calibrate your transmitter by using the **NEXT** and **ENTER** buttons to make your selections. Refer to the menu structure diagram and accompanying table for guidance.

At any time during the calibration, you can **CANCEL**, restore your prior calibration and return to online mode, or **SAVE** your new calibration.

Figure 59 - Calibration Menu Structure

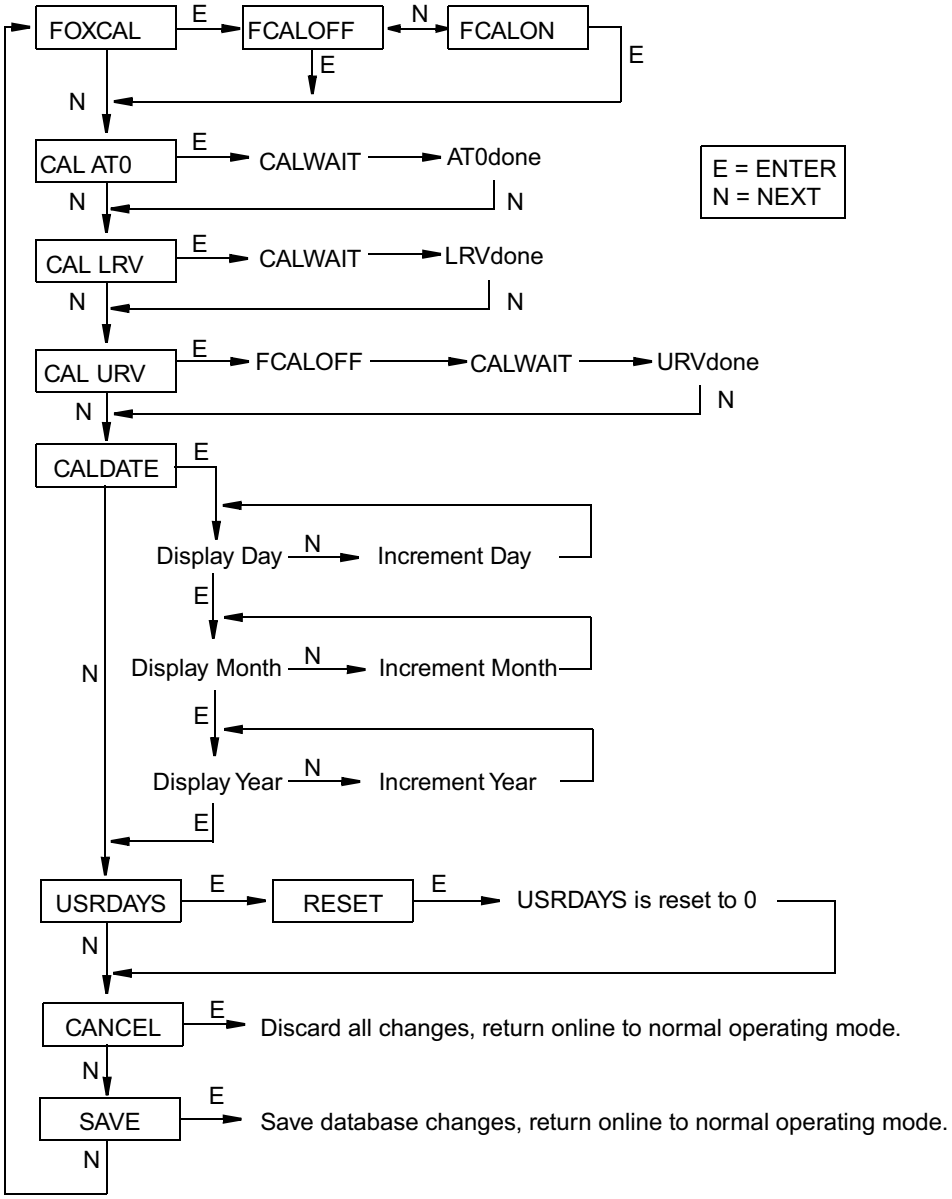

Table 15 - Calibration Menu Items

Item	Description
FOXCAL	This menu option allows you to enable or disable the FoxCal™ multiple calibration feature. To enable FoxCal™ calibrations, select **FOXCAL** from the **CALIB** menu, and then select **FCALON**. Similarly, to disable FoxCal™, select **FCALOFF**. (FF **FOXCAL_CONTROL**)
CAL AT0[43]	This menu option calibrates the transmitter at zero pressure. To set or reset the zero point at zero pressure, apply zero pressure to the transmitter. When **CAL AT0** appears on the display, press **ENTER**. This can be done whether LRV is zero or not. When the process is complete, **AT0done** appears on the display. (FF **CAL_AT_ZERO**)

43. This function is not applicable to absolute pressure transmitters.

Table 15 - Calibration Menu Items (Continued)

Item	Description
CAL LRV	This menu option calibrates the transmitter at 0% of the transmitter's range (LRV). To set or reset 0% of range input, apply pressure to the transmitter equal to the lower range value (LRV) in the transmitter database. When **CAL LRV** appears on the display, press **ENTER**. **CALWAIT** appears on the display while the calibration is taking place. **LRVdone** appears when the process is complete. (FF **CAL_POINT_LO**)
CAL URV	This menu option calibrates the transmitter at 100% of the transmitter's upper range value (URV). To set or reset 100% of range input, apply pressure to the transmitter equal to the upper range value (URV) in the transmitter database. When **CAL URV** appears on the display, press **ENTER**. **NOTE:** If FoxCal™ (or FF **CAL_POINT_HI**) was enabled prior to starting the calibration, the **CAL URV** process will disable it and display **FCALOFF**. **CALWAIT** appears on the display while the calibration is taking place. **URVdone** appears when the process is complete. (FF **CAL_POINT_HI**)
CALDATE	This menu option allows you to enter the calibration date. This entry is not required, but it can be used for record-keeping or plant maintenance purposes. To edit the calibration date, go to **CALDATE** with the **NEXT** button and press **ENTER**. You then can change the day, month, and year. The display shows the last date with the day flashing. Use the **NEXT** button to step through the menu of digits to select the desired day, then press **ENTER**. Repeat this process for the month and year. (FF **SENSOR_CAL_DATE**)
USRDAYS	The Time in Service meter tracks the number of days the pressure transmitter has been in service since the last Time in Service meter reset. For example, you can reset the Time in Service meter to 0 when the transmitter is calibrated. Reset the number of days the transmitter has been in service by navigating to **USRDAYS** with the **NEXT** button. (FF **USER_DAYS**)

Messages

The following calibration-related messages may appear on the optional display.

Parameter	Condition Tested	Message	Description
Password Protection	Password	**BAD PWD**	Bad password entered; use another.
Write Protection	Write protection enabled	**REJECT**	User attempted an action that is write protected.
ZERO	Internal offset too large	**BADZERO**	Check applied pressure, configured **M1_LRV**, and configured **M1EOFF**.
SPAN	Slope too large or too small	**BADSPAN**	Check applied pressure, configured **M1_LRV**, and configured **M1EFAC**.
M1_URV	**M1_URV**>max pressure in EGU	**URV>FMX**	Entered pressure is greater than the maximum rated pressure of the transmitter. Check entry. Verify EGUs.
	M1_URV<min pressure in EGU	**URV<FMN**	Entered pressure is less than the minimum rated pressure of the transmitter. Check entry. Verify EGUs.
	M1_URV=M1_LRV	**LRV=URV**	Cannot set span to 0. Check entry. Check **M1_LRV**.
	M1 turndown exceeds limit	**BADTDWN**	Check entry. Check **M1_LRV**.
	URV<0 with **M1 SqRt** or **M2 SqRt**	**URV<LRV**[44]	Square root mode with nonzero LRV is not valid. Change LRV to 0.

44. DP transmitters only.

Parameter	Condition Tested	Message	Description
M1_LRV	**M1_LRV**>max pressure in EGU	**LRV>FMX**	Entered pressure is greater than the maximum rated pressure of the transmitter. Check entry. Verify EGUs.
	M1_LRV<min pressure in EGU	**LRV<FMN**	Entered pressure is less than the minimum rated pressure of the transmitter. Check entry. Verify EGUs.
	M1_URV=M1_LRV	**LRV=URV**	Cannot set span to 0. Check entry. Check **M1_URV**.
	M1 turndown exceeds limit	**BADTDWN**	Check entry. Check **M1_URV**.

Using the External Zero Button

Transmitters with FOUNDATION Fieldbus offer an optional external zero adjustment mechanism in the electronics housing. This mechanism allows calibration at zero pressure (the **CAL AT0** function, for GP and DP transmitters) or at the lower range value pressure (the **CAL LRV** function) without removing the electronics compartment cover. The mechanism is magnetically activated through the housing wall to help prevent moisture from entering the enclosure.

NOTE: Do not use **CAL AT0** if pressure seals are used that are at different elevations than the transmitter.

Figure 60 - Optional External Zero Button

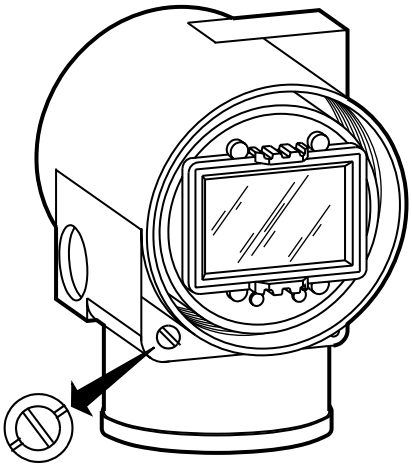

EXTERNAL ZERO BUTTON
LATCHED (NONACTIVATING) POSITION

Zero Adjustment for Transmitters with the Optional Display

1. Unlatch the external zero button by turning it 90 degrees in a counterclockwise direction so that the screwdriver slot lines up with the two holes in the face of the adjacent part. Do not push the button with the screwdriver while doing this.

2. To set or reset using the optional display:
   a. To set or reset the zero point at zero pressure, apply zero pressure to the transmitter or (for DP transmitters) use a bypass valve to equalize pressure on both sides of the transmitter. Press the external zero button until the display reads **CAL AT0**. Release the button. The display reads **CALWAIT**.

      When the display reads **AT0done**, calibration is complete.

   b. To set or reset the 0% of range input, apply the lower range value (LRV) pressure to the transmitter and press and hold the external zero button until the display reads **CAL LRV** (it reads **CAL AT0** first). Release the button. The display reads **CALWAIT**.

      When the display reads **LRVdone**, calibration is complete.

   c. If additional rezeroing is required, repeat this step.

   Other possible messages are:
   - **DISABLD**, if **EX ZERO** is configured as **EXZ DIS**.
   - **EXZ DIS IGNORED**, if the transmitter is not in the on-line mode.
   - **WP ENAB**, if the write protection jumper is in write protect position.
3. Relatch the external zero button by turning it 90 degrees in a clockwise direction to avoid pressing the button accidentally. Do not push the button with the screwdriver while doing this.

Zero Adjustment for Transmitters without the Optional Display

If the optional display is not present, you can accomplish the same functions by pressing the external zero button for different lengths of time. Pressing the button for 1 to 3 seconds allows you to execute a **CAL AT0**; pressing the button for 5 or more seconds allows you to execute a **CAL LRV**.

NOTICE

POTENTIAL MISCONFIGURATION

Use care when using the external zero button without the optional display. You must rely strictly on the length of time you press and hold the external zero button to distinguish between **CAL AT0** and **CAL LRV**.

Failure to follow these instructions can result in misconfiguration.

1. Unlatch the external zero button by turning it 90 degrees in a counterclockwise direction so that the screwdriver slot lines up with the two holes in the face of the adjacent part. Do not push the button with the screwdriver while doing this.
2. To set or reset using only the external zero button:
   a. To set or reset the zero point at zero pressure, apply zero pressure to the transmitter or (for DP transmitters) use a bypass valve to equalize pressure on both sides of the transmitter. Press the external zero button for 1 to 3 seconds, then release the button.

   b. To set or reset 0% of range input, apply the lower range value (LRV) pressure to the transmitter. Press and hold the external zero button for at least 5 seconds, then release the button.

   c. If additional rezeroing is required, repeat this step.
3. Relatch the external zero button by turning it 90 degrees in a clockwise direction to avoid pressing the button accidentally. Do not push the button with the screwdriver while doing this.

Calibration from a FOUNDATION Fieldbus Host

There are two ways to perform a two-point calibration using a DD. Both require that you first set the Target mode in the **MODE_BLK** parameter to **Out of Service**, and then set the **PRIMARY_VALUE_RANGE** parameter. **PRIMARY_VALUE_RANGE** sets the range of values over which the instrument is calibrated.

- If you change the elements of **PRIMARY_VALUE_RANGE** individually, you must first set the desired EGU in **UNITS_INDEX**.
- Check your **EU_0** and **EU_100** values to make sure that they are the proper values for your application.
- **EU_0** must always be less than **EU_100** by the value in the parameter **CAL_MIN_SPAN**.
- The difference between **EU_100** and **EU_0** must never exceed **CAL_MAX_SPAN**.
- The values in **PRIMARY_VALUE_RANGE** should also not exceed those in **SENSOR_RANGE**, as these are the maximum limits of the sensor.

For instructions on changing **EU_0** and **EU_100**, refer to *Configuring Parameters in the Transducer Block, page 75*.

If Device Description (DD) Methods are Unavailable

1. Put the Transducer Block in the Out Of Service (OOS) mode and make sure the **MODE_BLK•ACTUAL** reads **OOS**.
2. Set the desired range of calibration in **PRIMARY_VALUE_RANGE**.
3. Set the **CAL_UNIT** parameter to match **PRIMARY_VALUE_RANGE•UNITS_INDEX**.
4. Put the Transducer block into Manual or Automatic mode.
5. Attach a reference pressure source to the transmitter and set it to the value specified in the **PRIMARY_VALUE_RANGE•EU_0** parameter.

   Once the pressure is stable, this value is written to the **CAL_POINT_LO** parameter. This write action calibrates the low point of the transmitter.
6. Check the status of the **FOXCAL_CONTROL** parameter:
   a. If the **FOXCAL_CONTROL** parameter is **ON**, the calibration is complete. Go to the next step.
   b. If the **FOXCAL_CONTROL** parameter is **OFF**, and a full 2-point calibration is allowed, set the reference pressure source to the value specified in the parameter **PRIMARY_VALUE_RANGE•EU_100**.
7. If the **FOXCAL_CONTROL** parameter is **OFF**, and a full two-point calibration is allowed, set the reference pressure source to the value specified in the parameter **PRIMARY_VALUE_RANGE•EU_100**.

   Once the pressure is stable, this value is written to the **CAL_POINT_HI** parameter. This write action calibrates the high point of the transmitter.

   NOTE: The difference between the lower range and upper range pressures must equal or exceed the **CAL_MIN_SPAN**.
8. Select the method from the **SENSOR_CAL_METHOD** parameter (normally set for **User Trim Standard Calibration**).
9. Type in the location in the **SENSOR_CAL_LOC** parameter.
10. Type in the initials of the person performing the calibration in the **SENSOR_CAL_WHO** parameter.

11. Adjust the **SENSOR_CAL_DATE** parameter.
12. Put the Transducer Block in the Auto mode and make sure the **MODE_BLK•ACTUAL** reads **Auto**.
13. Write the changes to the transmitter.

Using Device Description (DD) Methods

1. Execute the Calibrate Low Point method. The screen text will be similar to the example below. Follow the prompts.

```
----------------------------------------
Calibrate Low Point
----------------------------------------

Calibrate Low Point

Calibrates the offset of the Primary Value by calibrating the instrument to the configured
Primary Value Range.EU_0

Please press the enter key to continue.

Setting mode to Manual

Setting Sensor Calibration Method to User Trim Standard Calibration

Setting Calibration Units to match Primary Value Range units

Set applied Reference Pressure to (configure EU_0) (configured EGU)

Please press the enter key to continue.

Enter reference pressure: ______ Hit Enter.
Done

Please press the enter key to continue.
-------------------------------------------------
      Method execution has completed.
-------------------------------------------------
```

2. Once the Calibrate Low Point method is complete, execute the Calibrate High Point method if **FOXCAL_CONTROL** is **OFF**.

```
----------------------------------------
Calibrate High Point
----------------------------------------

Calibrate High Point

Calibrates the span of the Primary Value by calibrating the instrument to the configured
Primary Value Range.EU_100

 Calibrate Low Point should be done first

Please press the enter key to continue.
Setting mode to Manual

Setting Sensor Calibration Method to User Trim Standard Calibration

Setting Calibration Units to match Primary Value Range units

Set applied Reference Pressure to (configured EU_100) (configured EGU)

Please press the enter key to continue.
Enter reference pressure: ______ Hit Enter.
Done

Please press the enter key to continue.
-------------------------------------------------
      Method execution has completed.
-------------------------------------------------
```

Using Device Type Manager (DTM) Methods

1. Select the **Calibration Lowest Point** and follow the prompts, pressing **NEXT** between steps.
2. If **FOXCAL_CONTROL** is **OFF**, select **Calibration Highest Point** and follow the prompts, pressing **NEXT** between steps.

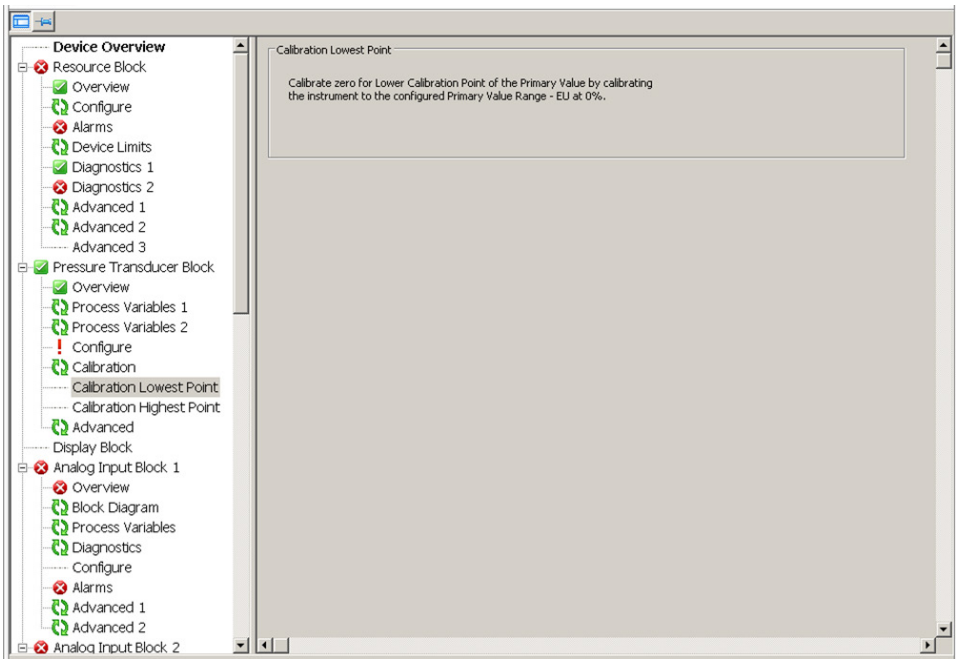

Troubleshooting

Simulation Mode

The transmitter has a simulation capability that can be used for debugging/ troubleshooting the system when the process is not running. Once the simulation jumper is set, you can select any value as the input to the AI Block for testing or debugging purposes. The procedure is as follows:

1. Place the appropriate AI Block in Out of Service (OOS) mode using the configurator software.
2. Remove the housing cover and the optional indicator, if applicable.
3. To activate Simulation mode, move the simulation jumper to the top position as shown in *Setting the Simulate Jumper, page 44*.
4. Replace the indicator and housing cover, if desired.
5. Set the **SIMULATE_ENABLE•DISABLE** to **Active**.
6. Set the **SIMULATE_STATUS_QUALITY** to **Good_NonCascade** (suggested setting) or other appropriate setting.
7. Type in the value you want as the output from the Transducer Block in the **Simulate_Value** parameter.
8. Click the **Write Changes** button. If you try to send a simulated output without putting the jumper in the correct position, the software will not change anything (device did not accept this parameter value), and you will get an error response.
9. Set the AI Block to AUTO mode.
10. Proceed with troubleshooting, keeping in mind that the output of the AI Block has been set by the value typed in Step 7.
11. When troubleshooting is finished, set the AI Block to Out of Service (OOS).
12. Set the **SIMULATE_ENABLE•DISABLE** to **Disabled**.
13. Click **Write Changes**.
14. Place the AI Block in AUTO mode using the configurator software. Make sure the **MODE_BLK•ACTUAL** reads **AUTO**.
15. Reset the simulate jumper.
16. Reassemble the electronics module, indicator, and housing cover.

Restart

The **RESTART** parameter in the Resource Block should only be used when the configuration in the transmitter is incorrect and you cannot fix the problem by using the troubleshooting information in this section.

In all cases, try cycling the power to the transmitter first. Then go back to the block with the problem and try to write the changes to the transmitter. If that does not clear the problem, proceed with the restart procedure.

NOTE: When you do a “Defaults” **RESTART** command in the Resource Block, the configured parameters will automatically default to the status and values predetermined by the Fieldbus Foundation. These are the same as the initial factory settings shown in *Appendix A: FOUNDATION Fieldbus Parameters, page 165* for the Resource, Analog Input, and PID Blocks, but are different than those shown for the Transducer Block.

1. Open the Resource Block and put it in the OOS mode.
2. Open the **RESTART** box and select one of the following:
   - **Uninitialized** —Do not use. (It may not appear on the list.)
   - **Run** — The default setting; the nominal state when not restarting.
   - **Defaults** — Sets the parameters to the Fieldbus Foundation defaults, which may be different than the initial factory settings. This resets all configurable function block application objects. It also clears all configured Trend and Link Objects. A restart of the processor is also performed automatically after re-initialization is completed.
   - **Processor** — Does a warm restart of the CPU. It has the same effect as cycling the power (off and on) to the transmitter.
   - **Restart Factory Defaults** — Resets all device parameters (including communications, TAG, and Address) to default values.
   - **Restart Factory Configuration** — Resets all device parameters to the condition at delivery from the factory.
   - **Restart Factory Instantiated** — Sets all instantiable AI blocks to default values (i.e., two instantiable AI blocks back to instantiated).
3. Click **Write Changes**.
4. Put the Resource Block back into AUTO mode. The **RESTART** selection will default to the **Run** position.
5. Reconfigure the appropriate function blocks.

Switch Mode Checklist

1. Verify that the block is scheduled. (Resource block and transducer block are always scheduled.)
2. Check the error messages in the **BLOCK_ERR_DESC_1** parameter.
3. Verify that the resource block is in Auto Mode.
4. Verify that requested mode is permitted.

Schedule Download Checklist

1. Verify that all blocks in the network have different tags.
2. Verify that no two blocks from the same devices are scheduled to be executed at the same time.
3. Verify that there is enough time for block execution.

Block Errors

The following table lists all of the possible error codes in the function blocks. (Not all error codes are possible in all of the blocks.) The condition number is shown in the **BLOCK_ERR** parameter for all blocks, and in the **XD_ERROR** parameter in the Transducer Block.

Table 16 - Block Errors

Bit Number	Name/Description
0	No Error.
1	Block Configuration Error: See *Configuration Errors, page 103*.
2	Link Configuration Error: A link used in one of the function blocks is improperly configured.
3	Simulate Active: The Simulation jumper is enabled. This is not an indication that the I/O blocks are using simulated data.
4	Local Override.
5	Device Fault State Set.
6	Device Needs Maintenance Soon.
7	Input Failure/Process Variable Has Bad Status: The hardware is not functioning as expected, an input is not connected, or a status is being simulated.
8	Output Failure: The output is bad based primarily upon a bad input (detected by this block or back-calculation input has a status of BAD).
9	Memory Failure: A memory failure has occurred in Flash, RAM, or EEPROM memory.
10	Lost Static Data: Static data stored in non-volatile memory has been lost.
11	Lost NV Data: Non-volatile data stored in non-volatile memory has been lost.
12	Readback Check Failed.
13	Device Needs Maintenance Now.
14	Power Up: The device was just powered. Wait.
15	Out Of Service: The actual mode is OOS. Change to AUTO.

Table 17 - Configuration Errors

Error	Description
Resource Block	
All Static Parameters Are Reset	Device needs a complete download
Analog Input (AI) Block	
XD_SCALE•EU_0 ≥ XD_SCALE•EU_100	Low end of scale must be less than high end
OUT_SCALE•EU_0 ≥ OUT_SCALE•EU_100	Low end of scale must be less than high end
OUT_SCALE = XD_SCALE and L_TYPE = Direct	Scales must match if L_TYPE is Direct
XD_SCALE•UNITS_INDEX ≠ Pressure Channel Units	Units in Transducer Block and AI Block must match
XD_SCALE•UNITS_INDEX ≠ Temperature Channel Units	Units in Transducer Block and AI Block must match
XD_SCALE•UNITS_INDEX ≠ Flow Channel Units	Units in Transducer Block and AI Block must match
AI Block not scheduled	AI Block must be scheduled to run by a host
Invalid Channel	AI Block Channel must be 1, 2, or 3

Table 17 - Configuration Errors (Continued)

Error	Description
Proportional Integral, Derivative (PID) Block	
SP not initialized	SP has never been written
BYPASS not initialized	BYPASS must be set to On or Off
SHED_OPT not initialized	SHED_OPT must be initialized for ROUT and RCAS modes
GAIN not initialized	GAIN must be greater than zero
OUT_SCALE•EU_0 ≥ OUT_SCALE•EU_100	Low end of scale must be less than high end
PV_SCALE•EU_0 ≥ PV_SCALE•EU_100	Low end of scale must be less than high end
FF_SCALE•EU_0 ≥ FF_SCALE•EU_100	Low end of scale must be less than high end
TRK_SCALE•EU_0 ≥ TRK_SCALE•EU_100	Low end of scale must be less than high end
PID Block not scheduled	PID Block must be scheduled to run by a host

Inter-Board Communication Errors/Status

The **FD_SIMULATE•DIAGNOSTIC_VALUE** parameter in the Resource Block reflects the state of the sensor board. If something occurs that affects the state of the sensor board, a status message will be posted. For example:

- Sensor Board Bad Status
- Sensor Board Comm Alert
- Electronics Over Temperature
- Electronics Under Temperature
- Transducer block in Check condition

Fieldbus Diagnostic Methods

Two FOUNDATION Fieldbus diagnostic methods are implemented in the DD and DTM under the Resource Block.

- **FF_Comm_Diagnostic** tells you the time when the instrument last powered up (as sent by the DCS) and how many times the instrument has joined/rejoined the bus. Reading **FF_Comm_Diagnostic** can be used to determine if the instrument is resetting itself or dropping out because of electrical noise on the communications bus.
- **FF_Livelist_Diagnostic** works only if the instrument has the Link Active Scheduler (LAS) option enabled. This diagnostic method shows you all the addresses that fieldbus devices are using, including the DCS.

Maintenance

⚠⚠WARNING

EXPLOSION HAZARD

- For nonintrinsically safe installations, to help prevent a potential explosion in a Division 1 hazardous area, de-energize transmitters before you remove the threaded housing covers.
- For explosion proof and non-incendive installations, do not disconnect equipment when a flammable or combustible atmosphere is present.

Failure to follow these instructions can result in death or serious injury.

Parts Replacement

For optimum transmitter performance, send the transmitter to the factory to replace parts. Removing the process covers may require recalibration of the transmitter.

Replacing the Terminal Block Assembly

To replace the terminal block assembly, follow these steps:

1. Turn off the transmitter power source.
2. Turn the cover lock screw (if applicable) clockwise to disengage the lock.
3. Remove the covers from the field terminals and electronics compartments by rotating the covers counterclockwise.
4. Remove the digital display (if applicable) by grasping the two tabs on the display and rotating it about 10° in a counterclockwise direction.
5. Remove the electronics module from the housing by loosening the two captive screws that fasten it to the housing. Then pull the module out of the housing far enough to gain access to the cable connectors on the rear of the module.
6. Remove the four socket head screws fastening the terminal block.
7. Disconnect the terminal block cable connector from the electronics module.
8. Remove the terminal block and the gasket under it.
9. Connect the new terminal block cable connector to the electronics module.
10. Install the new terminal block and new gasket. Reinstall the four screws and tighten them to a torque of 0.67 N-m (6 lbf-in) in several even increments.
11. Reinstall the electronics module (and digital display, if applicable).
12. Reinstall the covers onto the housing by rotating them clockwise to seat the o-ring into the housing. Continue to hand-tighten until each cover contacts the housing metal-to-metal.
13. If cover locks are present, lock the cover per the procedure described in *Cover Locks, page 45*.
14. Turn on the transmitter power source.

Replacing the Vent Plug

Figure 61 - Replacing the Vent Plug

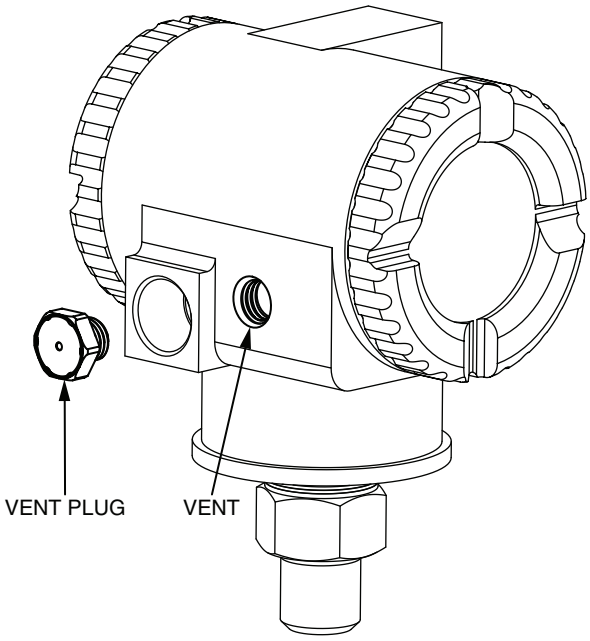

To replace the vent plug (gauge pressure transmitters only), refer to the diagram and follow these steps:

1. Remove the vent plug by unscrewing it counterclockwise.
2. Clean the angled sealing surface on the housing.
3. Lubricate the o-ring and the threads on the new plug with silicone lubricant (part number 0048130 or equivalent).
4. Install the new plug (part number X0179ME) into the housing by screwing it clockwise. Torque to 0.9 ±0.02 N-m (8 ±0.2 lbf-in).

Adding the Optional Display

Figure 62 - Adding the Optional Display

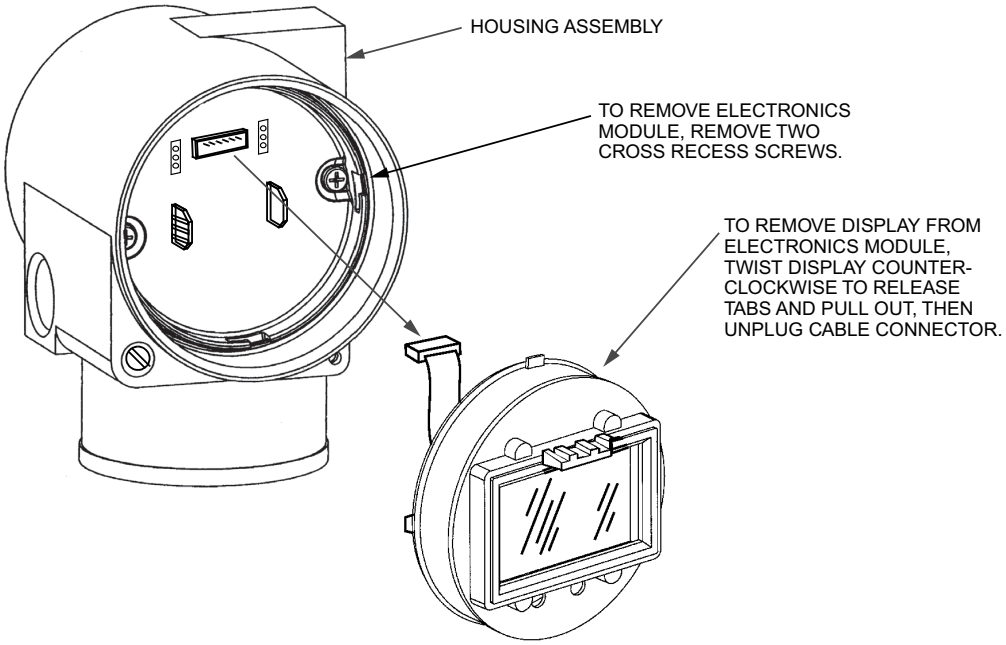

To add the optional display, refer to the diagram and follow these steps:

1. Turn off the transmitter power source.
2. Turn the cover lock screw (if applicable) clockwise to disengage the lock.
3. Remove the electronics compartment cover by rotating it counterclockwise.
4. Plug the display into the receptacle at the top of the electronics assembly.
5. Ensure that the o-ring is seated in its groove in the display housing. Then insert the display into the electronics compartment by grasping the two tabs on the display and rotating it about 10° in a clockwise direction.
6. Install the new, windowed cover onto the housing by rotating it clockwise to seat the o-ring into the housing. Continue to hand-tighten until the cover contacts the housing metal-to-metal.
7. If cover locks are present, lock the cover as described in *Cover Locks, page 45*.
8. Turn on the transmitter power source.

Rotating Process Covers for Venting

Your transmitter provides sensor cavity draining without the need for side drain connections, regardless of whether the transmitter is mounted vertically or horizontally. Sensor cavity venting is provided by mounting the transmitter horizontally or with the optional vent screw (option -V). If you do not have a vent screw, you can achieve venting (instead of draining) with vertical mounting by rotating the process covers.

NOTE: This procedure involves removing the process covers. You may need to recalibrate the transmitter afterwards.

Figure 63 - Sensor Cavity Venting and Draining

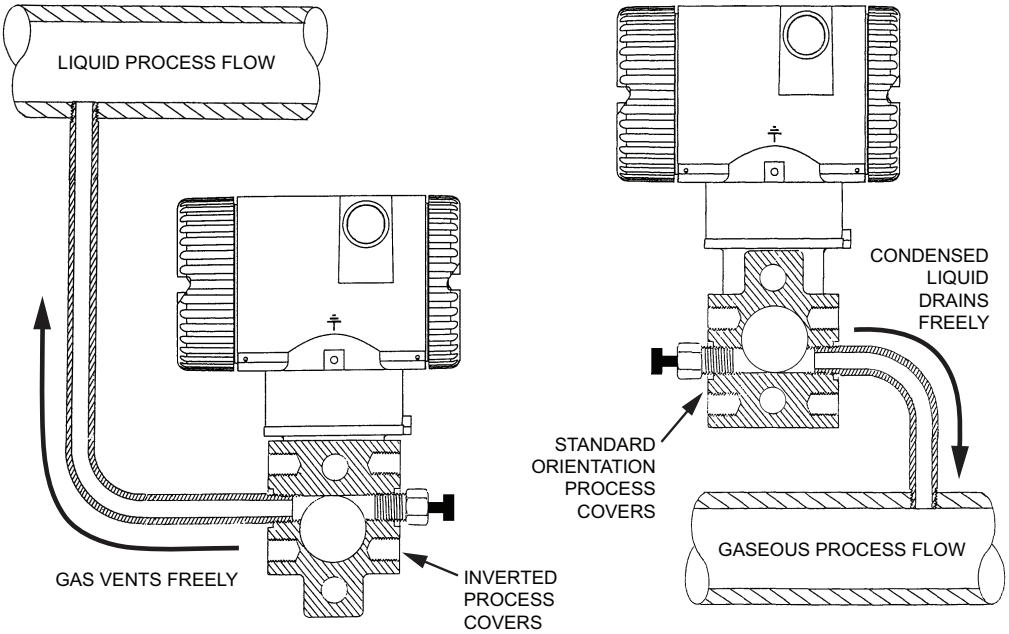

To rotate the process covers, refer to the diagram and follow these steps:

1. Turn off the transmitter power source and remove the transmitter from the process.
2. Remove the process covers from the sensor by removing two hex head bolts.
3. Replace the gaskets in the process covers.
4. Rotate the process covers so that the longer tab is at the bottom.
5. Reinstall the process covers and bolts. Torque cover bolts to 100 N-m (75 lbf-ft) in several even increments. Torque values are 68 N-m (50 lbf-ft) for 316 ss bolts; 75 N-m (55 lbf-ft) for B7M bolts.
6. Pressure test the sensor and process cover assembly by applying a hydrostatic pressure of 150% of the maximum static and overrange pressure (see *Maximum Static, Overrange, and Proof Pressure Ratings, page 14*) to both sides of the process cover/sensor assembly simultaneously through the process connections. Hold pressure for one minute. There should be no leakage of the test fluid through the gaskets. If leakage occurs, re-tighten the cover bolts or replace the gaskets and retest.

⚠ CAUTION

RISK OF POTENTIAL INJURY AND/OR REDUCED PERFORMANCE

Perform a hydrostatic test with a liquid, and follow proper hydrostatic test procedures.

Failure to follow these instructions can result in injury or reduced performance.

Dimensions

For dimensional information specific to your sales order, contact your sales representative to order a Certified Dimensional Print (CDP).

All dimensions in diagrams are shown in millimeters over inches ($\frac{mm}{in}$).

NOTE: For information on pulp and paper connection and sanitary pressure transmitters, see:

- DP 020-217, *Gauge and Absolute Pressure Transmitters With Pulp and Paper Process Connections*
- DP 020-218, *Sanitary Pressure Transmitters with 1½-, 2-, and 3-inch Tri-Clamp Process Connection*
- DP 020-219, *Sanitary Gauge or Absolute Pressure Transmitters with Mini Tank Spud Seal*

Direct Connect AP and Direct Connect GP Transmitters

Figure 64 - Direct Connect AP/GP Transmitters

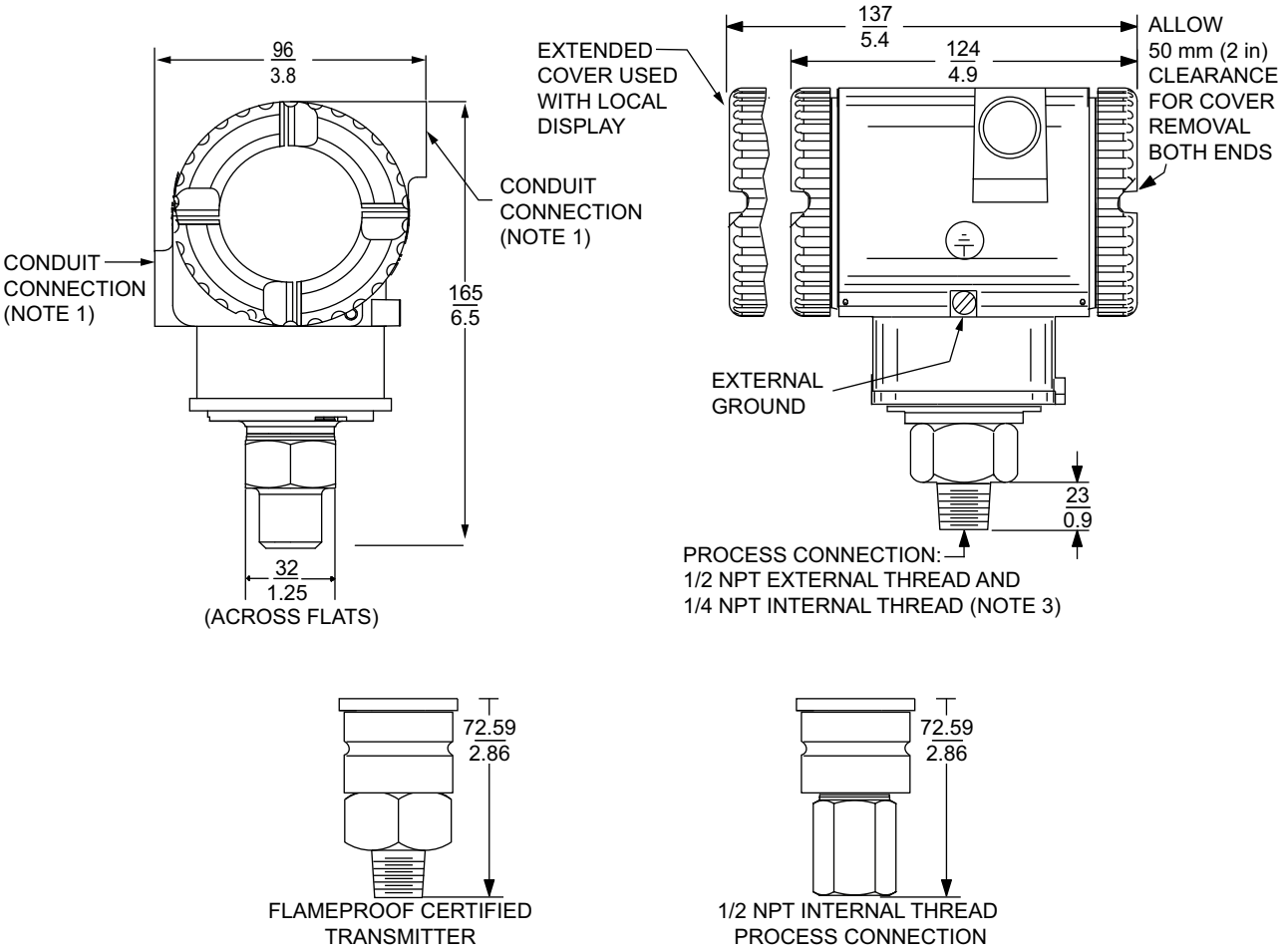

NOTES:
1. CONDUIT CONNECTION 1/2 NPT OR M20, BOTH SIDES: PLUG UNUSED CONNECTION WITH SUPPLIED METAL PLUG.
2. TOPWORKS ROTATABLE TO ANY POSITION WITHIN ONE TURN COUNTERCLOCKWISE OF FULLY TIGHTENED POSITION.
3. DO NOT USE THE 1/4 NPT INTERNAL THREAD TO DIRECTLY CONNECT THE TRANSMITTER.

Figure 65 - Direct Connect AP/GP Transmitters with Options -G, -V1, -V2, -V3, -V4, and -R

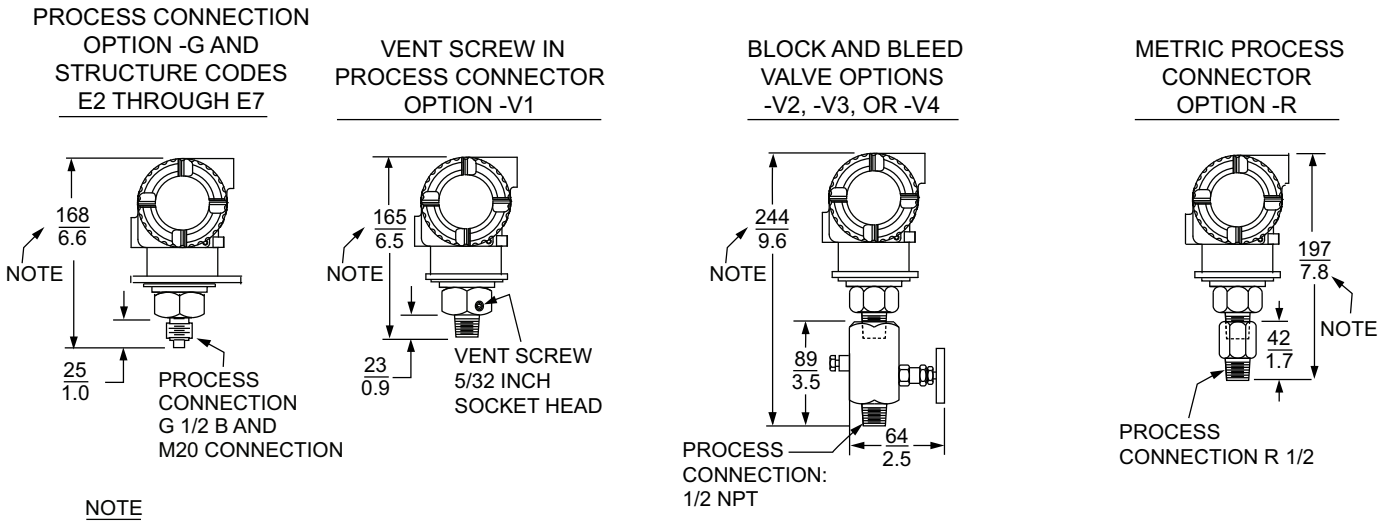

NOTE

1. FOR FLAMEPROOF CERTIFIED TRANSMITTERS, ADD 28 mm (1.1 in) TO OVERALL HEIGHT DIMENSION.

Figure 66 - Direct Connect AP/GP Transmitters with Options -M1, -M2, -M5, and -M6

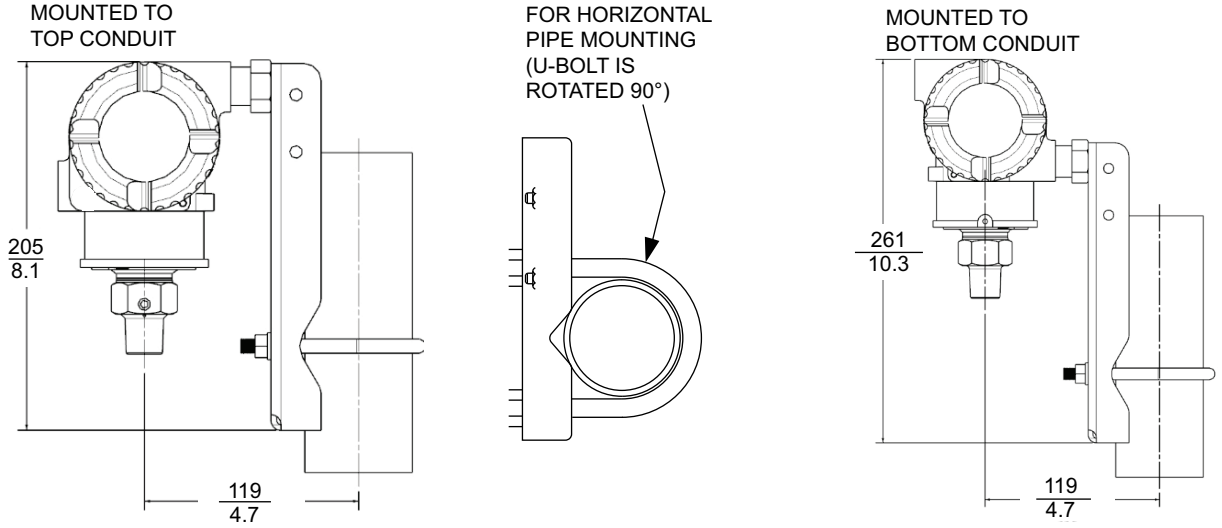

Figure 67 - Flameproof Direct Connect AP/GP Transmitters with Options -M7 and -M8

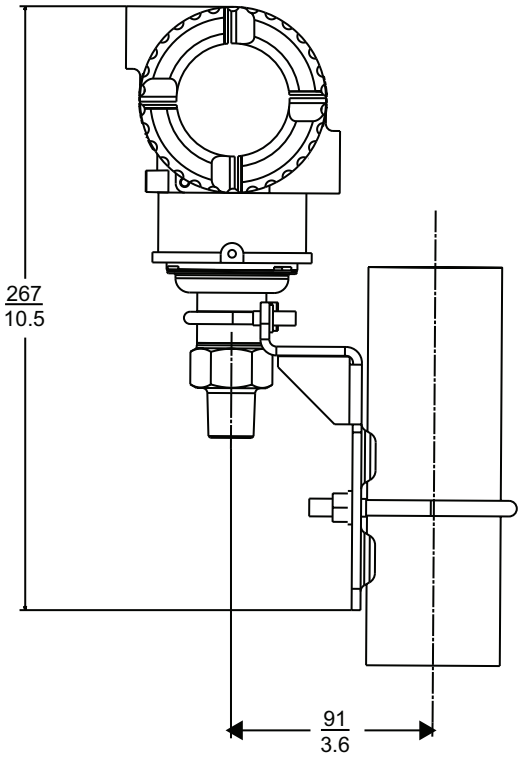

Biplanar AP and Biplanar GP Transmitters

Figure 68 - Biplanar AP/GP Transmitters

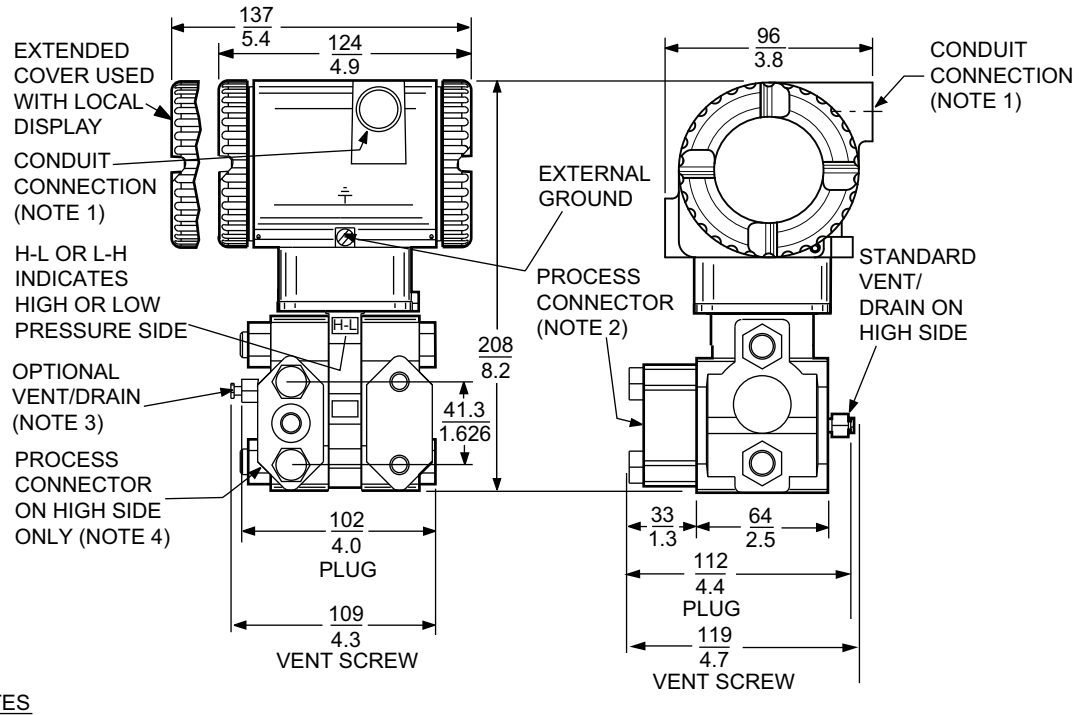

NOTES

1. CONDUIT CONNECTION 1/2 NPT OR M20, BOTH SIDES: PLUG UNUSED CONNECTION WITH SUPPLIED METAL PLUG.
2. PROCESS CONNECTOR CAN BE REMOVED AND CONNECTION MADE DIRECTLY TO PROCESS COVER USING 1/4 NPT INTERNAL THREAD IN PROCESS COVER. NOTE THAT WITH PROCESS CONNECTION CODE "0", THERE IS NO CONNECTOR.
3. PROCESS COVER CAN BE INVERTED MAKING OPTIONAL SIDE VENT A SIDE DRAIN.
4. FOR USERS WHO DESIRE THE PROCESS CONNECTOR ON THE RIGHT SIDE, ROTATE TRANSMITTER 180° AND RELOCATE PROCESS CONNECTOR (AND VENT SCREW, IF APPLICABLE).
5. DO NOT USE THE 1/4 NPT INTERNAL THREAD TO DIRECT-CONNECT THE TRANSMITTER WITHOUT A MOUNTING BRACKET.

Figure 69 - Biplanar AP/GP Transmitters with Options -D1, -D2, -D3, -D4, -D5, -D6, -D7, -D8, and -D9

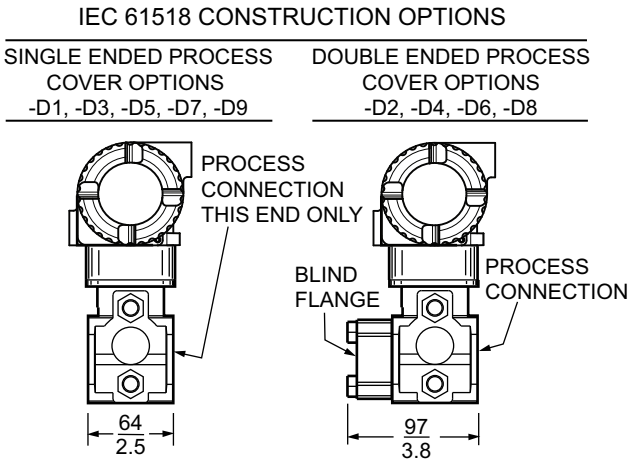

Figure 70 - Biplanar AP/GP Transmitters with Options -M0 and -M9 (Standard Stainless Steel or Painted Steel Bracket)

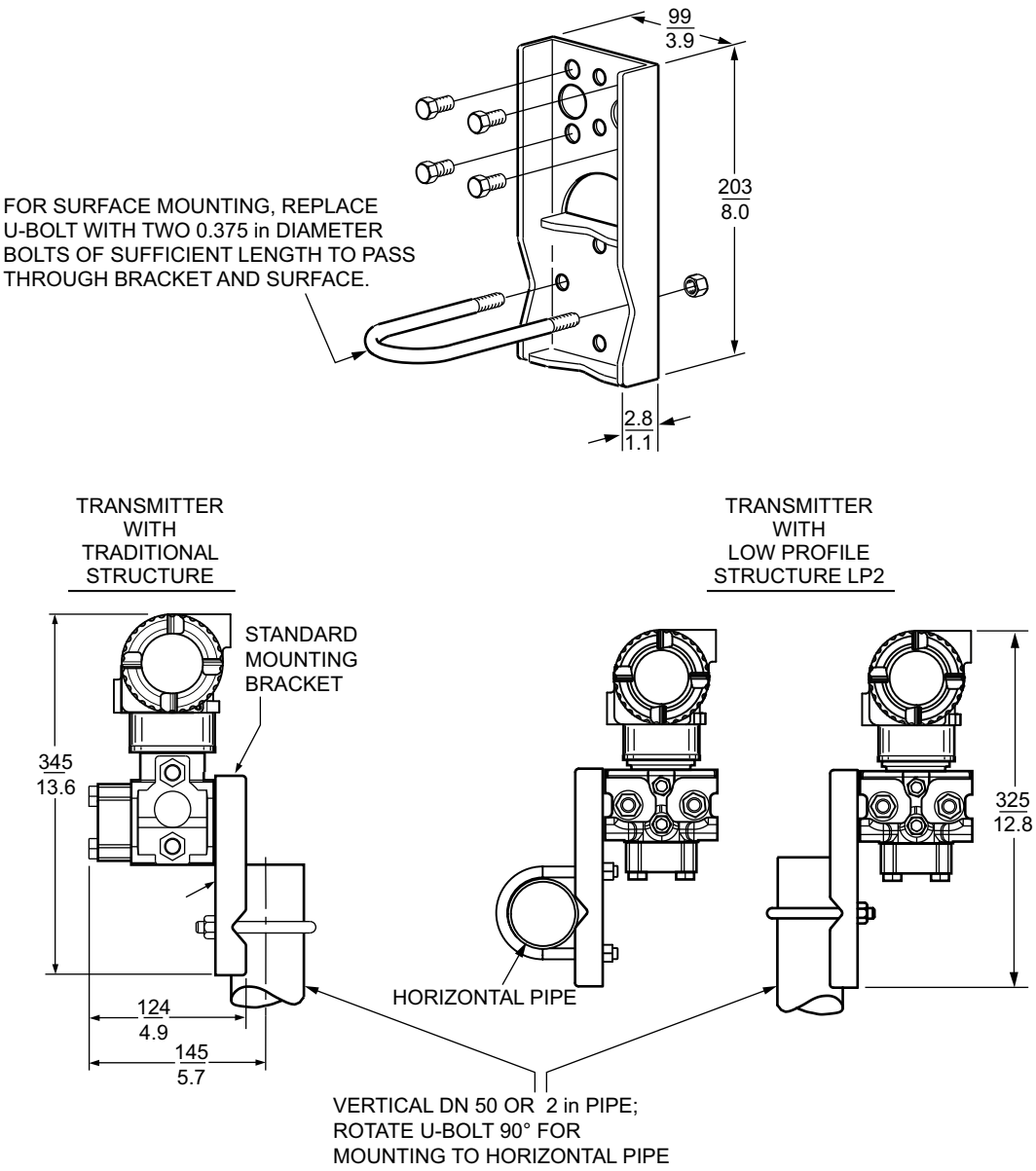

Figure 71 - Biplanar AP/GP Transmitters with Option -M3 (Universal Bracket)

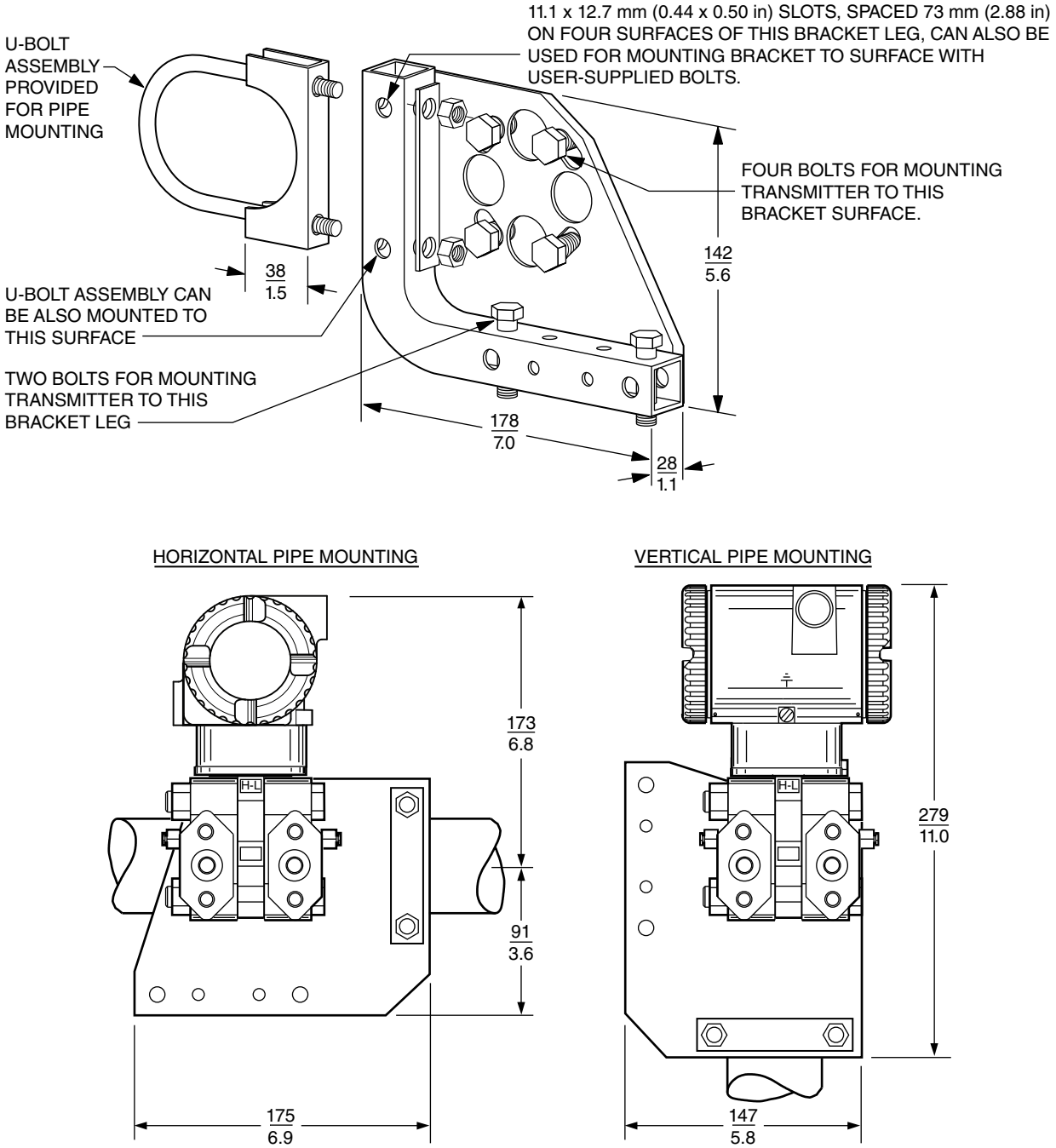

DP Transmitters

Figure 72 - DP Transmitters with Traditional Structure

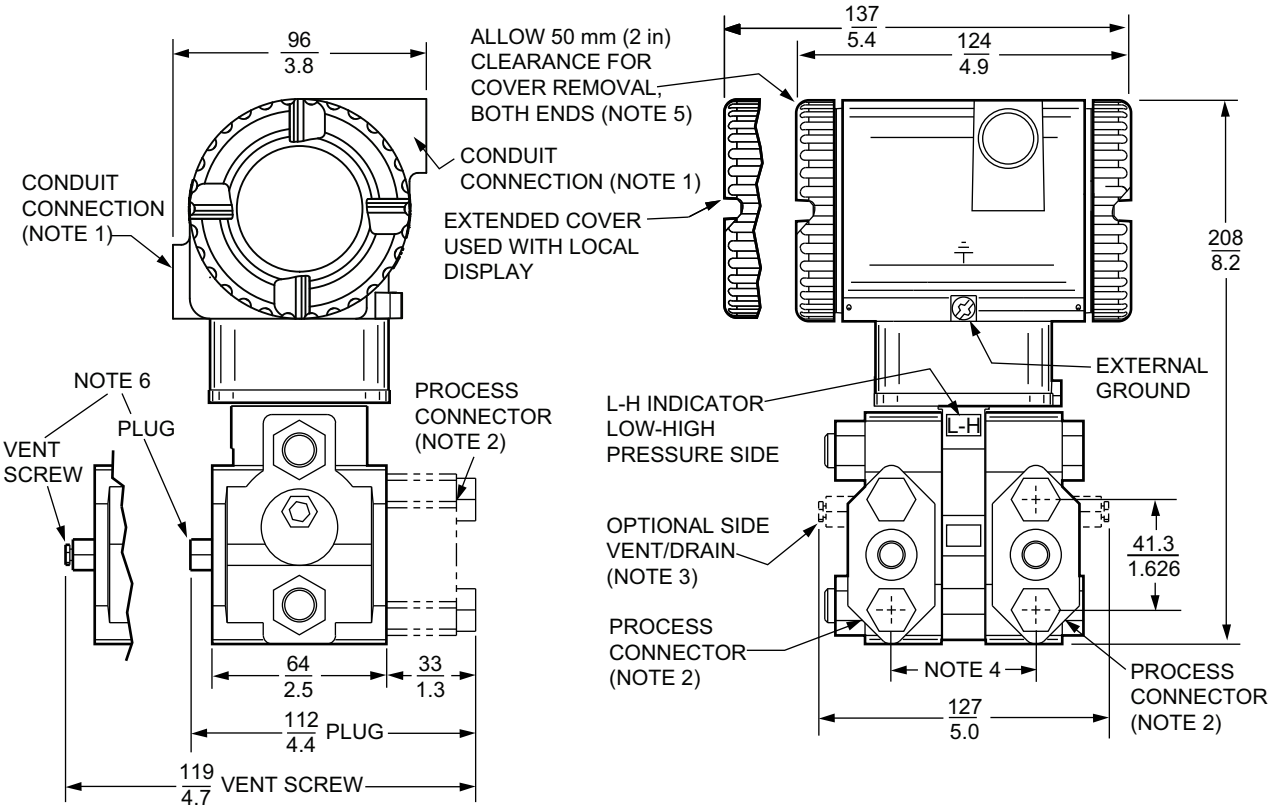

NOTES:
1. CONDUIT CONNECTION 1/2 NPT, BOTH SIDES: PLUG UNUSED CONNECTION WITH SUPPLIED METAL PLUG.
2. PROCESS CONNECTORS MAY BE REMOVED AND TRANSMITTER MOUNTED DIRECTLY ON A MANIFOLD, OR CONNECTIONS MADE DIRECTLY TO PROCESS COVER USING 1/4 NPT INTERNAL THREAD IN PROCESS COVER.
3. PROCESS COVER CAN BE INVERTED MAKING OPTIONAL SIDE VENTS OR SIDE DRAINS.
4. PROCESS CONNECTORS CAN BE INVERTED TO GIVE EITHER 51, 54, OR 57 mm (2.0, 2.125, OR 2.25 in) CENTER-TO-CENTER DISTANCE BETWEEN HIGH AND LOW PRESSURE CONNECTIONS.
5. TOPWORKS CAN BE ROTATED TO ANY POSITION WITHIN ONE TURN COUNTERCLOCKWISE OF THE FULLY TIGHTENED POSITION.
6. PROCESS COVER END PLUGS ARE SUBSTITUTED FOR VENT SCREWS WHEN OPTIONAL SIDE VENTS (NOTE 3) ARE SPECIFIED.

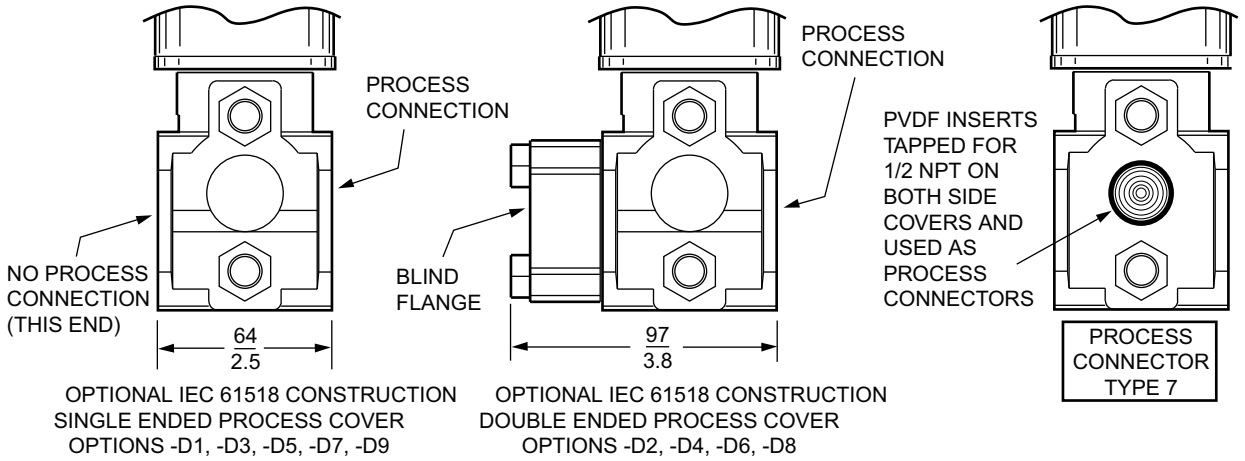

Figure 73 - DP Transmitters with Low Profile 1 (LP1) Structure

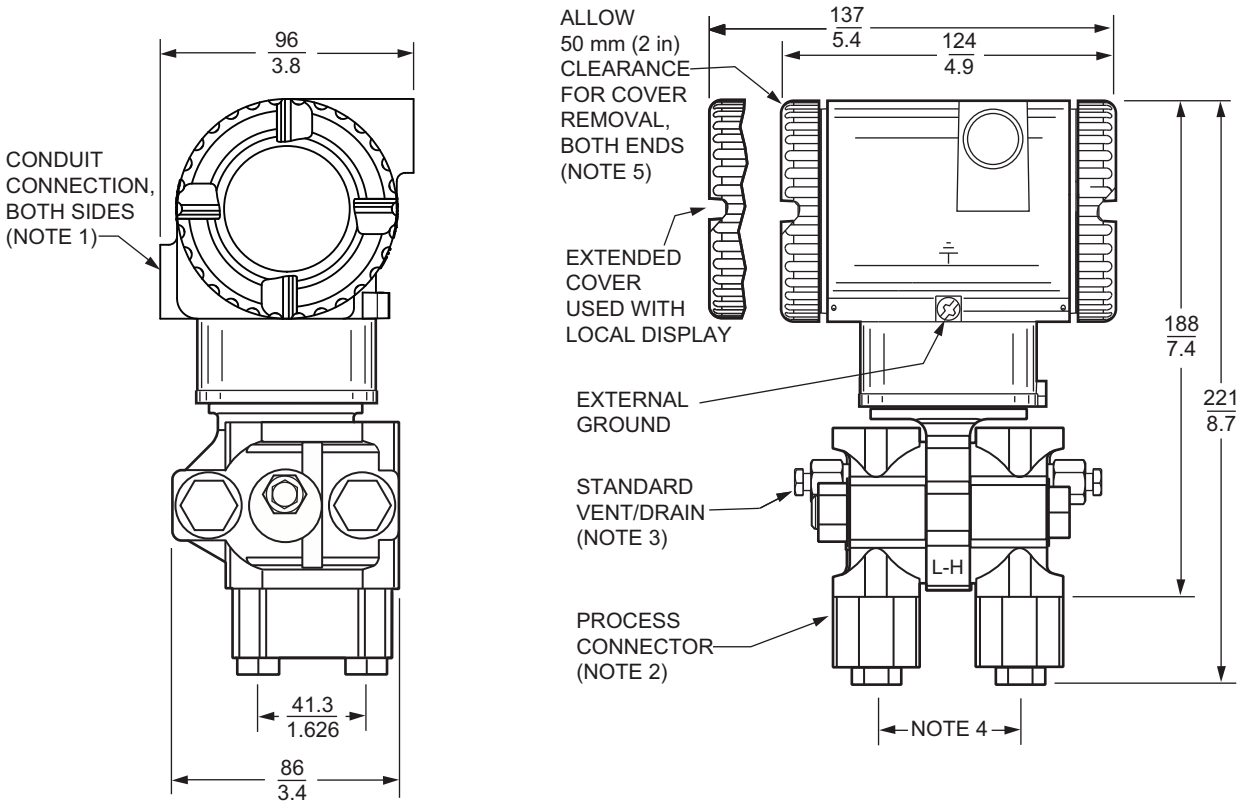

NOTES:
1. CONDUIT CONNECTION 1/2 NPT OR M20, BOTH SIDES: PLUG UNUSED CONNECTION WITH SUPPLIED METAL PLUG.
2. PROCESS CONNECTORS MAY BE REMOVED AND TRANSMITTER MOUNTED DIRECTLY ON A MANIFOLD, OR CONNECTIONS MADE DIRECTLY TO PROCESS COVER USING 1/4 NPT INTERNAL THREAD IN PROCESS COVER.
3. THE TRANSMITTER'S LOW PROFILE STRUCTURE LP1 IS SHOWN IN THE VERTICALLY UPRIGHT POSITION. NOTE THE LOCATION OF THE STANDARD VENT/DRAIN SCREW. IN THIS CONFIGURATION, THE TRANSMITTER CAN BE VENTED OR IS SELF-DRAINING. ALSO RECOMMENDED IS A HORIZONTAL INSTALLATION WHERE THE INSTALLED ORIENTATION CAN BE SET TO ALLOW FOR VENTING OR DRAINING.
4. PROCESS CONNECTORS CAN BE INVERTED TO GIVE EITHER 51, 54, OR 57 mm (2.0, 2.125, OR 2.25 in) CENTER-TO-CENTER DISTANCE BETWEEN HIGH AND LOW PRESSURE CONNECTIONS.
5. TOPWORKS CAN BE ROTATED TO ANY POSITION WITHIN ONE TURN COUNTERCLOCKWISE OF THE FULLY TIGHTENED POSITION.

Figure 74 - DP Transmitters with Low Profile 2 (LP2) Structure

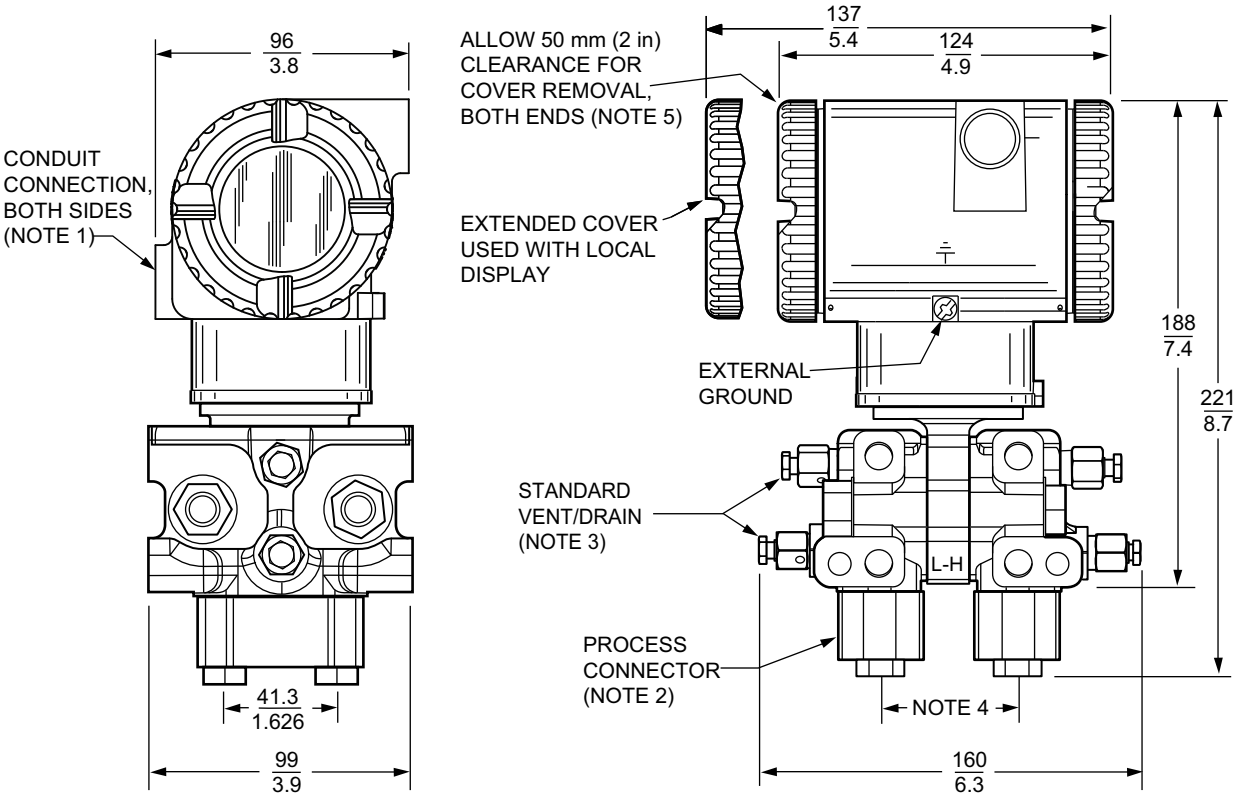

NOTES:
1. CONDUIT CONNECTION 1/2 NPT OR M20, BOTH SIDES: PLUG UNUSED CONNECTION WITH SUPPLIED METAL PLUG.
2. PROCESS CONNECTORS MAY BE REMOVED AND TRANSMITTER MOUNTED DIRECTLY ON A MANIFOLD, OR CONNECTIONS MADE DIRECTLY TO PROCESS COVER USING 1/4 NPT INTERNAL THREAD IN PROCESS COVER.
3. THE TRANSMITTER'S LOW PROFILE STRUCTURE LP2 IS SHOWN IN THE RECOMMENDED VERTICAL UPRIGHT POSITION. NOTE THE STANDARD VENT OR DRAIN SCREWS. HORIZONTAL INSTALLATIONS ARE NOT RECOMMENDED.
4. PROCESS CONNECTORS CAN BE INVERTED TO GIVE EITHER 51, 54, OR 57 mm (2.0, 2.125, OR 2.25 in) CENTER-TO-CENTER DISTANCE BETWEEN HIGH AND LOW PRESSURE CONNECTIONS.
5. TOPWORKS CAN BE ROTATED TO ANY POSITION WITHIN ONE TURN COUNTERCLOCKWISE OF THE FULLY TIGHTENED POSITION.

Figure 75 - DP Transmitters with Traditional or LP2 Structure and Options -M1 and -M2 (Standard Style Mounting Bracket)

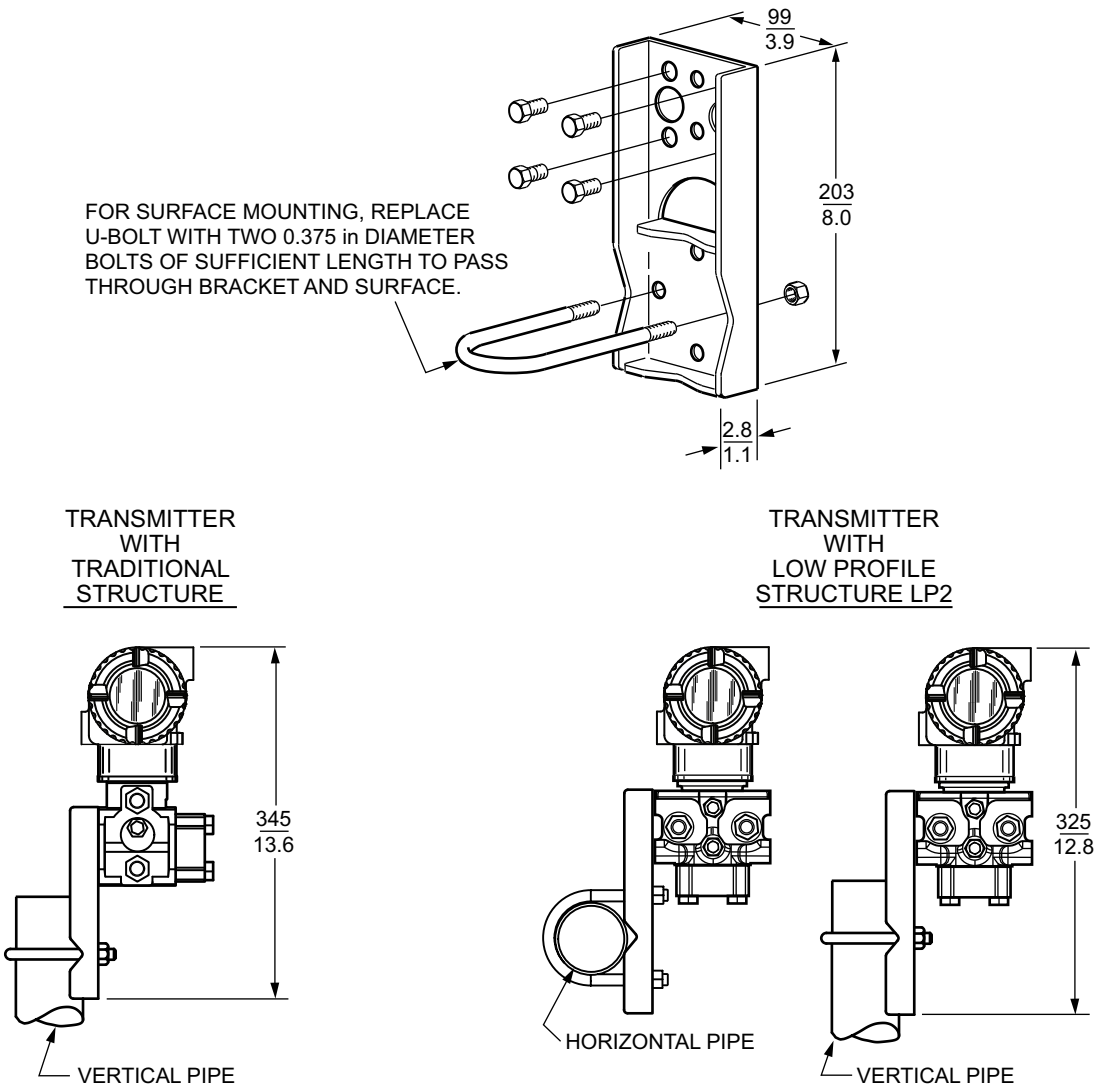

Figure 76 - DP Transmitters with Option -M3 (Universal Style Mounting Bracket Kit)

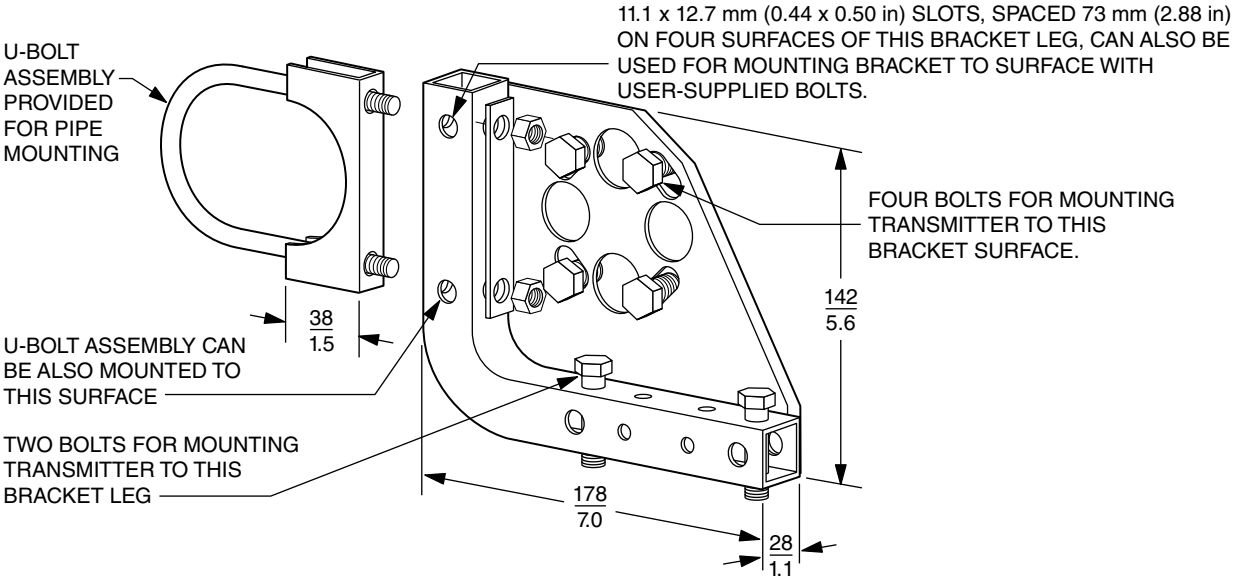

TYPICAL PIPE MOUNTING WITH LOW PROFILE STRUCTURE LP2

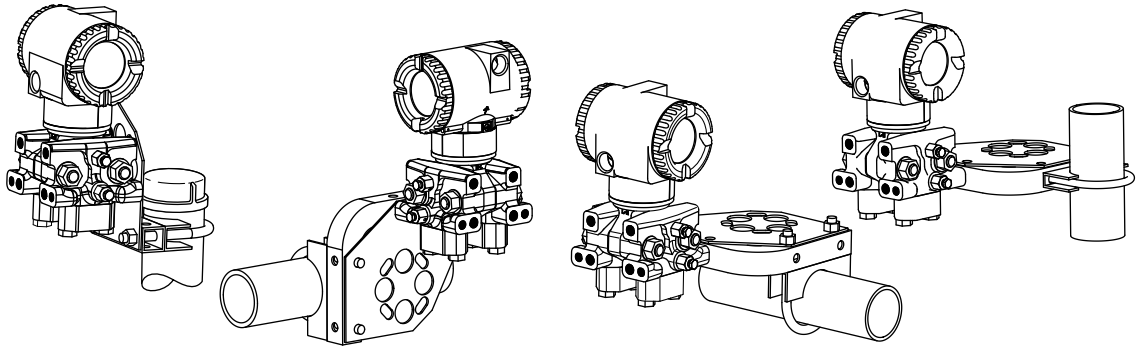

TYPICAL PIPE MOUNTING
LOW PROFILE STRUCTURE LP1

TYPICAL PIPE MOUNTING
WITH TRADITIONAL STRUCTURE

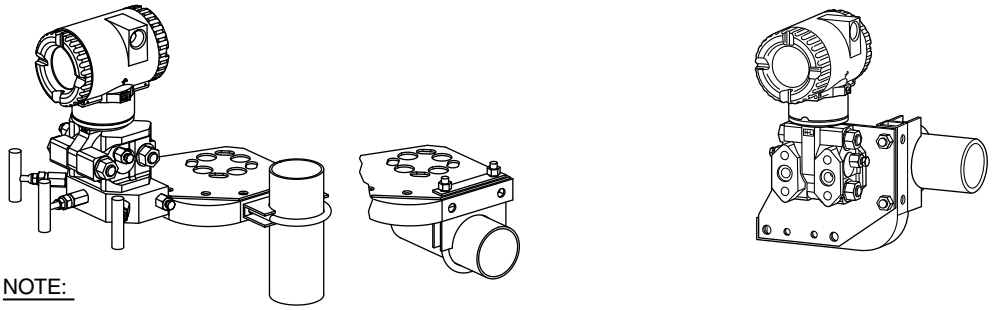

NOTE:

FOR SURFACE MOUNTING CONFIGURATIONS, USE THE U-BOLT MOUNTING HOLES FOR ATTACHING THE BRACKET TO A SURFACE RATHER THAN TO THE U-BOLT ASSEMBLY. SURFACE MOUNTING BOLTS FOR ATTACHING THE BRACKET TO A SURFACE ARE USER SUPPLIED.

Figure 77 - DP Transmitters with LP1 or LP2 Structure Mounted on a Coplanar™ Manifold

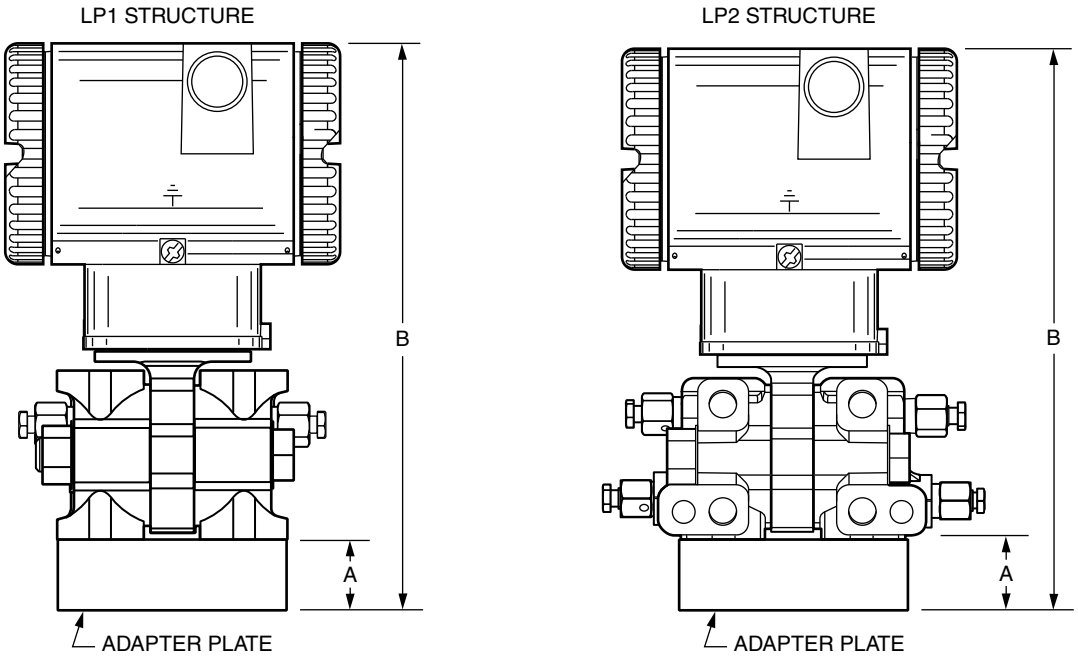

Manifold	Dimension A	Dimension B
MC	11 mm (0.5 in)	199 mm (7.9 in)
MT3	22 mm (0.9 in)	210 mm (8.3 in)

Figure 78 - DP Transmitters with Traditional Structure and Structure Codes -78 and -79 (Filled PVDF Connection)

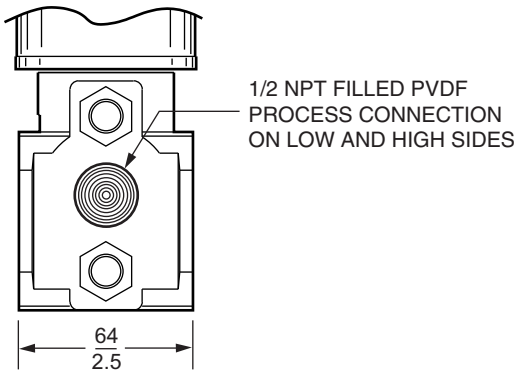

Figure 79 - DP Transmitters with Traditional Structure and Options -D1 to -D9

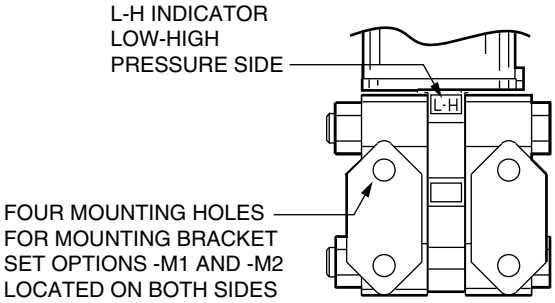

Parts

Model Codes

These tables list all of the available options, including other protocols, for the Absolute, Gauge, and Differential Pressure Transmitters.

Absolute and Gauge Pressure Transmitters

Code	Description
Model	
IAP	Absolute Pressure Transmitter
IGP	Gauge Pressure Transmitter
Tier	
05S	Value Performance[45]
10S	Advanced Performance[46] with FoxCal™
50S	Premium Performance[47] with FoxCal™
Electronics Versions/Output Signals	
-T	HART and 4 to 20 mA with SIL 2
-F	FOUNDATION Fieldbus H1 Digital Communications[48]
-V	Low Power Electronics, 1 to 5 Volts[49]
Structure Codes	
Structure — Direct Connect[50]	
20	316L ss Process Sensor; Co-Ni-Cr Diaphragm; Silicone Fill; 1/2 NPT Ext. Conn.; 1/4 NPT Int. Conn.[48]
21	316L ss Process Sensor; Co-Ni-Cr Diaphragm; Inert Fill; 1/2 NPT Ext. Conn.; 1/4 NPT Int. Conn.[48]
22	316L ss Process Sensor; 316L ss Diaphragm; Silicone Fill; 1/2 NPT Ext. Conn.; 1/4 NPT Int. Conn.
23	316L ss Process Sensor; 316L ss Diaphragm; Inert Fill; 1/2 NPT Ext. Conn.; 1/4 NPT Int. Conn.
30	316L ss Process Sensor; C276 Diaphragm; Silicone Fill; 1/2 NPT Ext. Conn.; 1/4 NPT Int. Conn.
31	316L ss Process Sensor; C276 Diaphragm; Inert Fill; 1/2 NPT Ext. Conn.; 1/4 NPT Int. Conn.
32	C276 Process Sensor; C276 Diaphragm; Silicone Fill; 1/2 NPT Ext. Conn.; 1/4 NPT Int. Conn.[48]
33	C276 Process Sensor; C276 Diaphragm; Inert Fill; 1/2 NPT Ext. Conn.; 1/4 NPT Int. Conn.[48]
34	316L ss Process Sensor; Co-Ni-Cr Diaphragm; Silicone Fill; 1/2 NPT Internal Conn. Only[48] [51]
35	316L ss Process Sensor; Co-Ni-Cr Diaphragm; Inert Fill; 1/2 NPT Internal Conn. Only[48] [51]
36	316L ss Process Sensor; 316L ss Diaphragm; Silicone Fill; 1/2 NPT Internal Conn. Only[51] [52]
37	316L ss Process Sensor; 316L ss Diaphragm; Inert Fill; 1/2 NPT Internal Conn. Only[51] [52]
38	316L ss Process Sensor; C276 Diaphragm; Silicone Fill; 1/2 NPT Internal Conn. Only[51] [52]
39	316L ss Process Sensor; C276 Diaphragm; Inert Fill; 1/2 NPT Internal Conn. Only[51] [52]

45. Refer to PSS 2A-1S05 A for accuracy specifications.
46. Refer to PSS 2A-1S10 A for accuracy specifications.
47. Refer to PSS 2A-1S50 A for accuracy specifications.
48. Not available with the Value (05S) transmitter.
49. Available only with the Value (05S) transmitter.
50. Not available with Electrical Certification codes that end in D or P.
51. Not available with option codes -V1, -V2, -V3, and -V4.
52. Not available with Electronics Version -V.

Code	Description
E2	316L ss Process Sensor; 316L ss Diaphragm; Silicone Fill; M20 External Conn. Only[53] [54]
E3	316L ss Process Sensor; 316L ss Diaphragm; Inert Fill; M20 External Conn. Only[53] [54]
E4	316L ss Process Sensor; C276 Diaphragm; Silicone Fill; M20 External Conn. Only[53] [54]
E5	316L ss Process Sensor; C276 Diaphragm; Inert Fill; M20 External Conn. Only[53] [54]
E6	C276 Process Sensor; C276 Diaphragm; Silicone Fill; M20 External Conn. Only[55] [53]
E7	C276 Process Sensor; C276 Diaphragm; Inert Fill; M20 External Conn. Only[55] [53]
Structure — Direct Connect Gold-Plated[55] [56]	
42	316L ss Process Sensor; Co-Ni-Cr Diaphragm; Silicone Fill; 1/2 NPT Internal Conn. Only[53]
43	316L ss Process Sensor; Co-Ni-Cr Diaphragm; Inert Fill; 1/2 NPT Internal Conn. Only[53]
44	316L ss Process Sensor; 316L ss Diaphragm; Silicone Fill; 1/2 NPT Internal Conn. Only[53]
45	316L ss Process Sensor; 316L ss Diaphragm; Inert Fill; 1/2 NPT Internal Conn. Only[53]
46	316L ss Process Sensor; C276 Diaphragm; Silicone Fill; 1/2 NPT Internal Conn. Only[53]
47	316L ss Process Sensor; C276 Diaphragm; Inert Fill; 1/2 NPT Internal Conn. Only[53]
70	316L ss Process Sensor; Co-Ni-Cr Diaphragm; Silicone Fill; 1/2 NPT Ext. Conn.; 1/4 NPT Int. Conn.
71	316L ss Process Sensor; Co-Ni-Cr Diaphragm; Inert Fill; 1/2 NPT Ext. Conn.; 1/4 NPT Int. Conn.
72	316L ss Process Sensor; 316L ss Diaphragm; Silicone Fill; 1/2 NPT Ext. Conn.; 1/4 NPT Int. Conn.
73	316L ss Process Sensor; 316L ss Diaphragm; Inert Fill; 1/2 NPT Ext. Conn.; 1/4 NPT Int. Conn.
80	316L ss Process Sensor; C276 Diaphragm; Silicone Fill; 1/2 NPT Ext. Conn.; 1/4 NPT Int. Conn.
81	316L ss Process Sensor; C276 Diaphragm; Inert Fill; 1/2 NPT Ext. Conn.; 1/4 NPT Int. Conn.
82	C276 Process Sensor; C276 Diaphragm; Silicone Fill; 1/2 NPT Ext. Conn.; 1/4 NPT Int. Conn.
83	C276 Process Sensor; C276 Diaphragm; Inert Fill; 1/2 NPT Ext. Conn.; 1/4 NPT Int. Conn.
G2	316L ss Process Sensor; 316L ss Diaphragm; Silicone Fill; M20 External Conn. Only[53]
G3	316L ss Process Sensor; 316L ss Diaphragm; Inert Fill; M20 External Conn. Only[53]
G4	316L ss Process Sensor; C276 Diaphragm; Silicone Fill; M20 External Conn. Only[53]
G5	316L ss Process Sensor; C276 Diaphragm; Inert Fill; M20 External Conn. Only[53]
G6	C276 Process Sensor; C276 Diaphragm; Silicone Fill; M20 External Conn. Only[53]
G7	C276 Process Sensor; C276 Diaphragm; Inert Fill; M20 External Conn. Only[53]

53. Not available with option codes -V1, -V2, -V3, and -V4.
54. Not available with Electronics Version -V.
55. Not available with the Value (05S) transmitter.
56. Not available with Electrical Certification codes that end in D or P.

Code	Description
Structure — Direct Connect Flameproof	
52	316L ss Process Sensor; 316L ss Diaphragm; Silicone Fill; 1/2 NPT External Conn. Only
53	316L ss Process Sensor; 316L ss Diaphragm; Inert Fill; 1/2 NPT External Conn. Only
60	316L ss Process Sensor; C276 Diaphragm; Silicone Fill; 1/2 NPT External Conn. Only
61	316L ss Process Sensor; C276 Diaphragm; Inert Fill; 1/2 NPT External Conn. Only
62	C276 Process Sensor; C276 Diaphragm; Silicone Fill; 1/2 NPT External Conn. Only[57]
63	C276 Process Sensor; C276 Diaphragm; Inert Fill; 1/2 NPT External Conn. Only[57]
90	316L ss Process Sensor; 316L ss Diaphragm; Silicone Fill; 1/2 NPT Internal Conn. Only[58 59]
91	316L ss Process Sensor; 316L ss Diaphragm; Inert Fill; 1/2 NPT Internal Conn. Only[58 59]
92	316L ss Process Sensor; C276 Diaphragm; Silicone Fill; 1/2 NPT Internal Conn. Only[58 59]
93	316L ss Process Sensor; C276 Diaphragm; Inert Fill; 1/2 NPT Internal Conn. Only[58 59]
F2	316L ss Process Sensor; 316L ss Diaphragm; Silicone Fill; M20 External Conn. Only[58 59]
F3	316L ss Process Sensor; 316L ss Diaphragm; Inert Fill; M20 External Conn. Only[58 59]
F4	316L ss Process Sensor; C276 Diaphragm; Silicone Fill; M20 External Conn. Only[58 59]
F5	316L ss Process Sensor; C276 Diaphragm; Inert Fill; M20 External Conn. Only[58 59]
F6	C276 Process Sensor; C276 Diaphragm; Silicone Fill; M20 External Conn. Only[57 58]
F7	C276 Process Sensor; C276 Diaphragm; Inert Fill; M20 External Conn. Only[57 58]
Structure — Biplanar (Vented Low Side Process Cover and Diaphragm)	
B0	316 ss Cover; Co-Ni-Cr Diaphragm; Silicone Fill[57]
B1	316 ss Cover; Co-Ni-Cr Diaphragm; Inert Fill[57]
B2	316 ss Cover; 316L ss Diaphragm; Silicone Fill
B3	316 ss Cover; 316L ss Diaphragm; Inert Fill
BG	316 ss Cover; 316 ss Gold-Plated Diaphragm; Silicone Fill[57]
B4	316 ss Cover; Monel Diaphragm; Silicone Fill[57]
B5	316 ss Cover; Monel Diaphragm; Inert Fill[57]
B6	316 ss Cover; C276 Diaphragm; Silicone Fill
B7	316 ss Cover; C276 Diaphragm; Inert Fill
N4	Monel Cover; Monel Diaphragm; Silicone Fill[57]
N5	Monel Cover; Monel Diaphragm; Inert Fill[57]
C6	C276 Cover; C276 Diaphragm; Silicone Fill[57]
C7	C276 Cover; C276 Diaphragm; Inert Fill[57]
C8	C276 Cover; Tantalum Diaphragm; Silicone Fill[57]
C9	C276 Cover; Tantalum Diaphragm; Inert Fill[57]
78	PVDF Insert; Tantalum Diaphragm; Silicone Fill[57 60]
79	PVDF Insert; Tantalum Diaphragm; Inert Fill[57 60]

57. Not available with the Value (05S) transmitter.
58. Not available with option codes -V1, -V2, -V3, and -V4.
59. Not available with Electronics Version -V.
60. Maximum pressure rating is 2.1 MPa (300 psi); temperature limits are derated to -7 and +82°C (+20 and +180°F).

Code	Description
Structure — LP1 Biplanar (Not Available with Pressure Seals)[61]	
LL	316 ss Cover; 316L ss Diaphragm; Silicone Fill
LM	316 ss Cover; 316L ss Diaphragm; Inert Fill
LC	316 ss Cover; C276 Diaphragm; Silicone Fill
LD	316 ss Cover; C276 Diaphragm; Inert Fill
CC	C276 Cover; C276 Diaphragm; Silicone Fill[62]
CD	C276 Cover; C276 Diaphragm; Inert Fill[62]
Structure — LP2 Biplanar (Not Available with Pressure Seals)[61]	
L2	316 ss Cover; 316L ss Process Sensor and Diaphragm; Silicone Fill
L3	316 ss Cover; 316L ss Process Sensor and Diaphragm; Inert Fill
L6	316 ss Cover; 316L ss Process Sensor; C276 Diaphragm; Silicone Fill
L7	316 ss Cover; 316L ss Process Sensor; C276 Diaphragm; Inert Fill
Structure — Direct Connect, Prepared for Schneider Electric Model Coded Pressure Seals[63]	
D1	316L ss Process Sensor and Diaphragm; Silicone Fill; Prepared for Direct Connect Seal[64]
D2	316L ss Process Sensor and Diaphragm; Inert Fill; Prepared for Direct Connect Seal[64]
S3	316L ss Process Sensor and Diaphragm; Silicone Fill; Prepared for Remote Mount Seal[65]
S4	316L ss Process Sensor and Diaphragm; Inert Fill; Prepared for Remote Mount Seal[65]
Structure — Direct Connect, Prepared for Non-Schneider Electric Model Coded Pressure Seals[63] [66]	
SC	316L ss Process Sensor and Diaphragm; Silicone Fill; Prepared for Remote Mount Seal
SD	316L ss Process Sensor and Diaphragm; Inert Fill; Prepared for Remote Mount Seal
Structure — Biplanar, Prepared for Schneider Electric Model Coded Pressure Seals[67] [68]	
P1	316 ss Cover; 316L ss Process Sensor and Diaphragm; Silicone Fill; Prepared for Direct Connect Seal[69]
P2	316 ss Cover; 316L ss Process Sensor and Diaphragm; Inert Fill; Prepared for Direct Connect Seal[69]
P3	316 ss Cover; 316L ss Process Sensor and Diaphragm; Silicone Fill; Prepared for Remote Mount Seal[65]
P4	316 ss Cover; 316L ss Process Sensor and Diaphragm; Inert Fill; Prepared for Remote Mount Seal[65]
Structure — Biplanar, Prepared for Non-Schneider Electric Model Coded Pressure Seals[66] [68]	
P5	316 ss Cover; 316L ss Process Sensor and Diaphragm; Silicone Fill; Prepared for Remote Mount Seal
P6	316 ss Cover; 316L ss Process Sensor and Diaphragm; Inert Fill; Prepared for Remote Mount Seal
Structure — Direct Connect Flameproof, Prepared for Schneider Electric Model Coded Pressure Seals	
D5	316L ss Process Sensor and Diaphragm; Silicone Fill; Prepared for Direct Connect Seal[64]
D6	316L ss Process Sensor and Diaphragm; Inert Fill; Prepared for Direct Connect Seal[64]
S5	316L ss Process Sensor and Diaphragm; Silicone Fill; Prepared for Remote Mount Seal[65]
S6	316L ss Process Sensor and Diaphragm; Inert Fill; Prepared for Remote Mount Seal[65]

61. Not available with Electronics Version -V.
62. Not available with the Value (05S) transmitter.
63. Not available with Electrical Certification codes that end in D or P.
64. Specify direct connect seal PSFFD, PSFAD, PSISD, or PSTAD.
65. Specify remote mount seal PSFFR, PSFAR, PSFES, PSFPS, PSISR, PSSCR, PSSSR, or PSTAR.
66. These structures are prepared for attachment of pressure seals by others. Do not specify a Schneider Electric seal model code.
67. Not available with optional Biplanar Process Connector (codes -F1 through -F6).
68. Not available with options -X1, -X2, or -X3.
69. Specify biplanar, direct connect seal PSFLT, PSSST, or PSSCT.

Code	Description
Structure — Direct Connect Flameproof, Prepared for Non-Schneider Electric Model Coded Pressure Seals[70]	
SH	316L ss Process Sensor and Diaphragm; Silicone Fill; Prepared for Remote Mount Seal
SJ	316L ss Process Sensor and Diaphragm; Inert Fill; Prepared for Remote Mount Seal
Structure — Direct Connect, Prepared for Sanitary or Pulp and Paper Seals[71] [72]	
TA	316L ss Process Sensor; 316L ss Diaphragm; Neobee Fill; 1.5" Tri-Clamp Sanitary Connection
T2	316L ss Process Sensor; 316L ss Diaphragm; Neobee Fill; 2.0" Tri-Clamp Sanitary Connection
T3	316L ss Process Sensor; 316L ss Diaphragm; Neobee Fill; 3.0" Tri-Clamp Sanitary Connection
TB	316L ss Process Sensor; C276 Diaphragm; Neobee Fill; 1.5" Tri-Clamp Sanitary Connection
T4	316L ss Process Sensor; C276 Diaphragm; Neobee Fill; 2.0" Tri-Clamp Sanitary Connection
T5	316L ss Process Sensor; C276 Diaphragm; Neobee Fill; 3.0" Tri-Clamp Sanitary Connection
M1	316L ss Process Sensor; 316L ss Diaphragm; Neobee Fill; Mini Tank Spud Seal, 1.5" Ext.
M6	316L ss Process Sensor; 316L ss Diaphragm; Neobee Fill; Mini Tank Spud Seal, 6" Ext.
M9	316L ss Process Sensor; 316L ss Diaphragm; Neobee Fill; Mini Tank Spud Seal, 9" Ext.
PA	316L ss Process Sensor; 316L ss Diaphragm; Silicone Fill; Sleeve Type 1" (nominal)
PB	316L ss Process Sensor; 316L ss Diaphragm; Silicone Fill; Threaded Type 1" (nominal)
PC	316L ss Process Sensor; 316L ss Diaphragm; Silicone Fill; Sleeve Type 1.5" (nominal)
PD	316L ss Process Sensor; 316L ss Diaphragm; Silicone Fill; Threaded Type 1.5" (nominal)
PE	316L ss Process Sensor; C276 Diaphragm; Silicone Fill; Sleeve Type 1" (nominal)
PF	316L ss Process Sensor; C276 Diaphragm; Silicone Fill; Threaded Type 1" (nominal)
PG	316L ss Process Sensor; C276 Diaphragm; Silicone Fill; Sleeve Type 1.5" (nominal)
PH	316L ss Process Sensor; C276 Diaphragm; Silicone Fill; Threaded Type 1.5" (nominal)
PJ	316L ss Process Sensor; C276 Diaphragm; Silicone Fill; Threaded Type 1.5" (fits Ametek spud)
Structure — Direct Connect, High Pressure (Gauge Pressure Only)[73]	
24	15-5 ss Process Sensor and Diaphragm; 1/4 NPT Internal Connection[74]
26	Inconel X-750 Process Sensor and Diaphragm; 1/4 NPT Internal Connection[74]
28	13-8 Moly ss Process Sensor and Diaphragm; Autoclave F-250-C Connection[75]

70. These structures are prepared for attachment of pressure seals by others. Do not specify a Schneider Electric seal model code.
71. Not available with Electrical Certification codes that end in D or P.
72. Available with Span Limit codes C and D only.
73. Available only with the Value (05S) transmitter.
74. Available with Span Limit code G only.
75. Available with Span Limit code H only.

Code	Description	
Span Limits		
Code	**Transmitters with Direct Connect Structures**	**Transmitters with Biplanar Structures**
A[76]	n/a	With -T or -F Electronics: n/a With -V Electronics: 0.12 and 7.5 kPa (0.5 and 30 inH_2O)[77]
B	n/a	With -T or -F Electronics: 0.12 and 50 kPa (0.5 and 200 inH_2O) With -V Electronics: 0.87 and 50 kPa (3.5 and 200 inH_2O)
C	With -T or -F Electronics: n/a With -V Electronics: 6.9 and 207 kPa (1 and 30 psi)	With -T or -F Electronics: 0.62 and 250 kPa (2.49 and 1000 inH_2O) With -V Electronics: 6.9 and 207 kPa (1 and 30 psi)
D	With -T or -F Electronics: 3.4 and 1380 kPa (0.5 and 200 psi) With -V Electronics: 69 and 2070 kPa (10 and 300 psi)	With -T or -F Electronics: 26 and 2070 kPa (3.75 and 300 psi)[78 79] With -V Electronics: 69 and 2070 kPa (10 and 300 psi)[78 79]
E	With -T or -F Electronics: 0.034 and 13.8 MPa (5 and 2000 psi) With -V Electronics: 0.69 and 20.7 MPa (100 and 3000 psi)	With -T or -F Electronics: 0.26 and 20.7 MPa (37.5 and 3000 psi)[78 79] With -V Electronics: 0.69 and 20.7 MPa (100 and 3000 psi)[78 79]
F	With -T or -F Electronics: 0.52 and 41.4 MPa (75 and 6000 psi)[77] With -V Electronics: 13.8 and 41.4 MPa (2000 and 6000 psi)[77]	With -T or -F Electronics: 1.1 and 34.5 MPa (165 and 5000 psi)[77 78 79] With -V Electronics: 1.38 and 34.5 MPa (200 and 5000 psi)[77 78 79]
G[76]	With -T Electronics: 34.5 and 104 MPa (5000 and 15000 psi)[77 80] With -V Electronics: 34.5 and 104 MPa (5000 and 15000 psi)[77 80]	n/a
H[76]	With -T Electronics: 69 and 207 MPa (10000 and 30000 psi)[77 81] With -V Electronics: 69 and 207 MPa (10000 and 30000 psi)[77 81]	n/a
Conduit Connection and Housing Material		
1	1/2 NPT Conduit Connection, Both Sides, Aluminum Housing	
3	1/2 NPT Conduit Connection, Both Sides, 316 ss Housing	
5	M20 Conduit Connection, Both Sides, Aluminum Housing	
6	M20 Conduit Connection, Both Sides, 316 ss Housing	

76. Available only with the Value (05S) transmitter.
77. Available for gauge pressure transmitters only.
78. Span limit, maximum working pressure, maximum overrange pressure, and maximum static pressure (d/p) are derated for optional IEC 61518 Construction and optional Bolting except for codes -D3, -D7, and -B2. Option -D1 is derated to 2320 psi. Options -D5 and -B1 are derated to 2175 psi. Options -D2, -D4, -D6, and -D8 are derated to 1500 psi. Option -B3 is derated to 2900 psi.
79. Not available with Structure codes 78 and 79 (PVDF process covers).
80. Available with Structure codes 24 and 26 only.
81. Available with Structure code 28 only.

Code	Description
Electrical Certifications	
AA	ATEX intrinsically safe, Ex ia IIC[82]
AD	ATEX flameproof, Ex d IIC[83]
AM	ATEX multiple certifications (includes ATEX Codes AA and AN)[82]
AN	ATEX protection type n, Ex ic IIC, or Ex nA[82]
AP	ATEX multiple certifications (includes ATEX Codes AA, AD and AN)[82 83]
BA	INMETRO intrinsically safe, Ex ia IIC[82]
BD	INMETRO flameproof, Ex d IIC[83]
BP	INMETRO multiple certifications (includes INMETRO Codes BA and BD)[82 83]
CA	CSA intrinsically safe, Zone certified Ex ia
CD	CSA zone certified flameproof Ex d IIC; also explosion proof, dust ignition-proof[83]
CM	CSA multiple certifications (includes CSA Codes CA and CN)
CN	CSA non-incendive, Zone certified Ex nA IIC
CP	CSA multiple certifications (includes CSA Codes CA, CD and CN)[83]
DA	Multi-marked ATEX and IECEx intrinsically safe, Ex ia IIC[82]
DD	Multi-marked ATEX and IECEx flameproof, Ex d IIC[83]
DM	Multi-marked ATEX and IECEx multiple certifications, ia, ic[82]
DN	Multi-marked ATEX and IECEx protection type n, Ex ic IIC[82]
DP	Multi-marked ATEX and IECEx multiple certifications, ia, ic, and d[82 83]
EA	IECEx intrinsically safe, Ex ia IIC[82]
ED	IECEx flameproof, Ex d IIC[83]
EM	IECEx multiple certifications, ia, ic, nA[82]
EN	IECEx protection type n, Ex ic IIC, or Ex nA[82]
EP	IECEx multiple certifications, ia, ic, nA, and d[82 83]
FA	FM Classes I, II and III Division 1 intrinsically safe, AEx ia IIC
FD	FM Classes I, II and III Division 1 explosion proof, dust-ignition proof, Zone approved AEx d IIC[83]
FM	FM multiple certifications (includes FM Codes FA or FN)
FN	Classes I, II and III FM Division 2 non-incendive, Zone approved AEx nA IIC
FP	FM multiple certifications (includes FM Codes FA, FD or FN)[83]
KD	KOSHA Ex d[84 85]
RA	EAC intrinsically safe, Ex ia[82]
RD	EAC flameproof, Ex d[82 83]
RN	EAC protection type n, Ex ic IIC or Ex nA[82]
MA	Multi-marked for ATEX, CSA, and FM Intrinsically Safe Application[82]
ZZ	No certification

82. Not available with Electronics Version -V.
83. Available with all biplanar structures and only the following Direct Connect Structure codes: 52, 53, 60, 61, 62, 63, 90, 91, 92, 93, F2, F3, F4, F5, F6, F7, D5, D6, S5, S6, SH, SJ, 24, 26, and 28.
84. Available only with Electronics Version -V.
85. Available only with Structure codes 52, 53, 60, 61, B2, B3, B6, B7, P1, P2, P3, P4, P5, P6, D5, D6, S5, S6, SH, SJ, 24, 26, and 28.

Code	Description
Optional Mounting Bracket Sets	
-M1	Painted Steel Bracket, Plated Steel Bolts, 1/2 NPT, Direct Connect Only[86 87 88]
-M2	Stainless Steel Bracket, Stainless Steel Bolts, 1/2 NPT, Direct Connect Only[86 87 88]
-M3	Universal Stainless Steel Mounting Bracket Set, Stainless Steel Hardware, Biplanar Only
-M5	Painted Steel Bracket, Plated Steel Bolts, M20, Direct Connect Only[86 87 89]
-M6	Stainless Steel Bracket, Stainless Steel Bolts, M20, Direct Connect Only[86 87 89]
-M7	Stainless Steel Bracket for Flameproof Direct Connect Sensor Structures[90]
-M8	Painted Steel Bracket for Flameproof Direct Connect Sensor Structures[90]
-M9	Painted Steel Bracket, Plated Steel Bolts, Biplanar Only
-M0	Stainless Steel Bracket, Stainless Steel Bolts, Biplanar Only
Optional Vent Screw and Block and Bleed Valve	
-V1	316 ss Vent Screw in Process Connection[86 91 92]
-V2	Block and Bleed Valve, Carbon Steel[86 91 93]
-V3	Block and Bleed Valve, 316 ss[86 91 93]
-V4	Block and Bleed Valve, 316 ss w/ Monel Trim, NACE Approved[86 91 93]
-V5	Vent Screw in Side of Process Cover[94 95 96]
-V6	Omit Vent Screw[97]
Optional Biplanar Process Connector Type (same material as Process Cover)[94 98]	
-F1	1/4 NPT[99]
-F2	1/2 NPT
-F3	RC 1/4[99]
-F4	RC 1/2
-F6	1/2 Schedule 80 Weld Neck[99]
Options for Digital Indicator with Pushbuttons	
-L1	Digital Display, Pushbuttons and Window Cover[100]
-L2	Substitute Solid Cover over Digital Display[101]

86. Not available with biplanar structures.
87. Not available with Electrical Certification codes that end in D or P.
88. Available with Conduit Connection and Housing Material codes 1 and 3 only.
89. Available with Conduit Connection and Housing Material codes 5 and 6 only.
90. Available only with flameproof Direct Connect Structure codes, excluding D5 and D6.
91. Not available with option -G.
92. Available only with 1/2 NPT 316L ss Structure codes 20, 21, 22, 23, 30, 31, 52, 53, 60, 61, 70, 71, 72, 73, 80, and 81.
93. Available only with structures that have 1/2 NPT external connections.
94. Available with biplanar structures only.
95. Not available with Structure codes LL, LM, LC, LD, CC, CD, L2, L3, L6, or L7. A vent screw in the side of the process cover is standard with these structures.
96. Not available with optional IEC 61518 Construction codes -D1 through -D9.
97. Available only for transmitters with biplanar LP1 or LP2 structures.
98. Not available with Structure codes 78 and 79 (PVDF process covers).
99. Not available with biplanar C276 structures.
100. Not available with Electronics Version -V.
101. Available only with Electronics Version -V.

Code	Description
Optional IEC 61518 Construction[102] [103]	
-D1	Single-Ended Process Cover with B7 Steel Bolt; No Connector Screw; MWP=2320 psi[104]
-D2	Double-Ended Process Cover[105] with B7 Steel Bolt; Size M10 Steel Connector Screw; MWP=1500 psi[106] [107] [108]
-D3	Single-Ended Process Cover with B7 Steel Bolt; No Connector Screw; MWP=3626 psi[104]
-D4	Double-Ended Process Cover[105] with B7 Steel Bolt; Size 7/16 Steel Connector Screw; MWP=1500 psi[106] [107] [108]
-D5	Single-Ended Process Cover with 316 ss Bolt; No Connector Screw; MWP=2175 psi[104]
-D6	Double-Ended Process Cover[105] with 316 ss Bolt; Size 7/16 316 ss Connector Screw; MWP=1500 psi[106] [107] [108]
-D7	Single-Ended Process Cover with 17-4 PH Bolt; No Connector Screw; MWP=3626 psi[104]
-D8	Double-Ended Process Cover[105] with 17-4 PH Bolt; Size 7/16 17-4 PH Connector Screw; MWP=1500 psi[106] [107] [108]
-D9	Single-Ended Process Cover with 17-4 PH Bolt; No Connector Screw; MWP=5800 psi[104]
Optional Cleaning and Preparation[109]	
-X1	Unit Degreased – for Silicone Fill Sensors Only[110]
-X2	Cleaned and Prepared for Oxygen Service – for Inert Fill Sensors Only[111] [112]
-X3	Cleaned and Prepared for Chlorine Service[111] [113]
Optional Bolting (Process Covers and Process Connectors)[102] [114] [115] [116]	
-B1	316 ss Bolts and Nuts (high corrosion protection; MWP derated to 2175 psi)[117]
-B2	17-4 PH ss Bolts and Nuts (bright acid tin coated corrosion protection with no pressure derating)
-B3	B7M Bolts and 2HM Nuts (conforms to NACE MR0175, Class II; MWP derated to 2900 psi)[117]
Optional Conduit Thread Adapters[118] [119]	
-A1	Hawke-Type 1/2 NPT Brass Cable Gland
-A3	M20 Connector
Optional Custom Factory Configuration	
-C1	Custom Factory Calibration (Calibration and Unit Tags Required)[120]
-C2	Custom Factory Configuration (requires Configuration Form to be filled out)

102. Span limit, maximum working pressure, maximum overrange pressure, and maximum static pressure (d/p) are derated for optional IEC 61518 Construction and optional Bolting except for codes -D3, -D7, and -B2. Option -D1 is derated to 2320 psi. Options -D5 and -B1 are derated to 2175 psi. Options -D2, -D4, -D6, and -D8 are derated to 1500 psi. Option -B3 is derated to 2900 psi.
103. Not available with optional Biplanar Process Connector (codes -F1 through -F6).
104. Available with Biplanar Structure codes B0, B1, B2, B3, BG, B4, B5, B6, B7, LL, LM, LC, and LD.
105. Blind connector supplied.
106. Temperature limits are derated to -10 and +80°C (14 and 176°F) for optional IEC 61518 Construction codes -D2, -D4, -D6, and -D8 only.
107. Available only with Structure codes B0, B1, B2, B3, BG, B4, B5, B6, and B7.
108. Not available with optional Mounting Bracket Sets -M3, -M9, and -M0.
109. Not available with Span codes G and H.
110. Available only with structures that have silicone fill and are not prepared for seals.
111. Available only with structures that have inert fill (excluding Structure code 79) and are not prepared for seals.
112. After units are cleaned and reassembled for oxygen service, they are not rechecked for accuracy. This may affect performance for DP and biplanar GP transmitters.
113. For -X3, standard bolting is replaced with 17-4 ph ss bolts and nuts. Therefore, Bolting codes -B1, -B2, and -B3 are not available with -X3.
114. Not available with Structure codes 78 and 79 (PVDF process covers).
115. Not available with optional IEC 61518 Construction codes -D1 through -D9.
116. Available with biplanar structures only.
117. See *Maximum Static, Overrange, and Proof Pressure Ratings, page 14* for pressure deratings when certain IEC 61518 options and Bolting Options -B1 or -B3 are specified.
118. Not available with Electrical Certification codes that end in D or P.
119. Available with Conduit Connection and Housing Material codes 1 and 3 only.
120. Not available as a selection for the Value (05S) transmitter because it is standard for these models.

Code	Description
Optional Electronics Housing Features	
-Z1	External Zero Adjustment[121 122]
-Z2	Custody Transfer Lock and Seal[123]
-Z3	External Zero Adjustment and Custody Transfer Lock/Seal[121 122 123]
Optional Ermeto Connectors	
-E3	316 ss for Connecting 6 mm Tubing to 1/4 NPT Process Connector[124]
-E4	316 ss for Connecting 12 mm Tubing to 1/2 NPT Process Connector[125]
Optional Manifold Configurations	
-H1	Manifold Mounted to Transmitter and Pressure Tested (1.5 times transmitter range or 1.5 times manifold rating, whichever is less)
-H2	Manifold Mounted to Transmitter and Pressure Tested (Certificate)
Optional SIL 2 Selections[126]	
-S1	Yellow Cover for SIL2 on Electronics/Indicator Side of Housing
-S2	Red Cover for SIL2 on Electronics/Indicator Side of Housing
Miscellaneous Optional Selections	
-F	Autoclave F-250-C (GP transmitters only)[127]
-G	G 1/2 B Manometer Process Connection[127 128]
-G1	Metal O-Ring for Pressure Seals in Vacuum Service[129]
-H	1/2 NPT External Thread (GP transmitters only)[127]
-J	Low Temperature Operative Limit -50°C (-58°F)[121 130 131 132]
-K2	FoxDoc DVD-ROM (instead of “Getting Started” Guide)
-R	R 1/2 Process Connection (1/2 NPT to R 1/2 Adapter)[133]
-T	Supplemental Customer Tag (Stainless Steel Tag Wired onto Transmitter)

121. Not available with Electronics Version -V.
122. Not available for structures with sanitary or pulp and paper seals.
123. For flameproof models, the -Z2 and -Z3 options provide the seals in addition to the cover locks that are already included in the standard offering for these models.
124. Available only with Biplanar Structure codes B0, B1, B2, B3, BG, B4, B5, B6, and B7, and Optional Biplanar Process Connector Type code -F1.
125. Available only with Biplanar Structure codes B0, B1, B2, B3, BG, B4, B5, B6, and B7, and Optional Biplanar Process Connector Type code -F2.
126. Available only with Electronics Version -T.
127. Available with Structure codes 24 and 26 only.
128. Available with non–gold-plated 316L ss direct connect structures with 1/2 NPT external connections.
129. Available only with Structure codes P1, P2, P3, P4, P5, and P6.
130. Not available with Structure codes 78 and 79 (PVDF process covers).
131. Not available with Optional IEC 61518 Construction codes -D2, -D4, -D6, and -D8.
132. Not available with Direct Connect Structure codes 21, 23, 31, 33, 35, 37, 39, E3, E5, E7, 43, 45, 47, 71, 73, 81, 83, G3, G5, G7, 53, 61, 63, 91, 93, F3, F5, F7; Biplanar Structure codes B1, B3, B5, B7, N5, C7, C9, 78, 79, LM, LD, CD, L3, L7, D2, S4, SD, P2, P4, P6, D6, S6, SJ; and all Sanitary/Pulp and Paper structures.
133. Available with 316L ss direct connect structures with 1/2 NPT external connections.

Differential Pressure Transmitters

Code	Description
Model	
IDP	Differential Pressure Transmitter
Tier	
05S	Value Performance[134]
10S	Advanced Performance[135] with FoxCal™
50S	Premium Performance[136] with FoxCal™
Electronics Versions/Output Signals	
-T	HART and 4 to 20 mA with SIL 2
-F	FOUNDATION Fieldbus H1 Digital Communications[137]
-V	Low Power Electronics, 1 to 5 Volts[138]
Structure Codes	
Structure — Traditional[139]	
20	316 ss Cover; Co-Ni-Cr Diaphragm; Silicone Fill; Max Static Pressure=25 MPa (3626 psi)[137]
21	316 ss Cover; Co-Ni-Cr Diaphragm; Inert Fill; Max Static Pressure=25 MPa (3626 psi)[137]
22	316 ss Cover; 316L ss Diaphragm; Silicone Fill; Max Static Pressure=25 MPa (3626 psi)
23	316 ss Cover; 316L ss Diaphragm; Inert Fill; Max Static Pressure=25 MPa (3626 psi)
24	316 ss Cover; Monel Diaphragm; Silicone Fill; Max Static Pressure=25 MPa (3626 psi)[137]
25	316 ss Cover; Monel Diaphragm; Inert Fill; Max Static Pressure=25 MPa (3626 psi)[137]
26	316 ss Cover; C276 Diaphragm; Silicone Fill; Max Static Pressure=25 MPa (3626 psi)
27	316 ss Cover; C276 Diaphragm; Inert Fill; Max Static Pressure=25 MPa (3626 psi)
34	Monel Cover; Monel Diaphragm; Silicone Fill; Max Static Pressure=25 MPa (3626 psi)[137]
35	Monel Cover; Monel Diaphragm; Inert Fill; Max Static Pressure=25 MPa (3626 psi)[137]
46	C276 Cover; C276 Diaphragm; Silicone Fill; Max Static Pressure=25 MPa (3626 psi)[137]
47	C276 Cover; C276 Diaphragm; Inert Fill; Max Static Pressure=25 MPa (3626 psi)[137]
48	C276 Cover; Tantalum Diaphragm; Silicone Fill; Max Static Pressure=25 MPa (3626 psi)[137]
49	C276 Cover; Tantalum Diaphragm; Inert Fill; Max Static Pressure=25 MPa (3626 psi)[137]
78	PVDF Insert; Tantalum Diaphragm; Silicone Fill; Max Static Pressure=2.07 MPa (300 psi)[137] [140]
79	PVDF Insert; Tantalum Diaphragm; Inert Fill; Max Static Pressure=2.07 MPa (300 psi)[137] [140]

134. Refer to PSS 2A-1S05 A for accuracy specifications.
135. Refer to PSS 2A-1S10 A for accuracy specifications.
136. Refer to PSS 2A-1S50 A for accuracy specifications.
137. Not available with the Value (05S) transmitter.
138. Available only with the Value (05S) transmitter.
139. Maximum static pressure can be derated by optional selections.
140. Maximum static pressure rating is 2.1 MPa (300 psi); temperature limits are -7 and +82°C (+20 and +180°F).

Code	Description
Structure — LP1 Direct Mount (Not Available with Pressure Seals); Maximum Static Pressure=25 MPa (3626 psi)[141]	
LL	316 ss Cover; 316L ss Diaphragm; Silicone Fill
LM	316 ss Cover; 316L ss Diaphragm; Inert Fill
LC	316 ss Cover; C276 Diaphragm; Silicone Fill
LD	316 ss Cover; C276 Diaphragm; Inert Fill
CC	C276 Cover; C276 Diaphragm; Silicone Fill[142]
CD	C276 Cover; C276 Diaphragm; Inert Fill[142]
Structure — LP2 Bracket Mount or Direct Mount (Not Available with Pressure Seals); Maximum Static Pressure=25 MPa (3626 psi)[141]	
52	316 ss Cover; 316L ss Diaphragm; Silicone Fill
53	316 ss Cover; 316L ss Diaphragm; Inert Fill
56	316 ss Cover; C276 Diaphragm; Silicone Fill
57	316 ss Cover; C276 Diaphragm; Inert Fill
Structure — Prepared for Schneider Electric Model Coded Pressure Seals (Static Pressure Rating Limited by Seal)[143] [144]	
S1	316 ss Cover; 316L ss Diaphragm; Silicone Fill; Remote Mount Seals, Both Sides[145]
S2	316 ss Cover; 316L ss Diaphragm; Inert Fill; Remote Mount Seals, Both Sides[145]
S3	316 ss, 1/2 NPT Cover; 316L ss Diaphragm; Silicone Fill; Remote Mount Seal, High Side[145]
S4	316 ss, 1/2 NPT Cover; 316L ss Diaphragm; Inert Fill; Remote Mount Seal, High Side[145]
S5	316 ss, 1/2 NPT Cover; 316L ss Diaphragm; Silicone Fill; Remote Mount Seal, Low Side[145]
S6	316 ss, 1/2 NPT Cover; 316L ss Diaphragm; Inert Fill; Remote Mount Seal, Low Side[145]
F1	316 ss, 1/2 NPT Cover; 316L ss Diaphragm; Silicone Fill; Direct Connect Seal, High Side
F2	316 ss, 1/2 NPT Cover; 316L ss Diaphragm; Inert Fill; Direct Connect Seal, High Side
F3	316 ss Cover; 316L ss Diaphragm; Silicone Fill; Direct Connect Seal, High Side and Remote Mount Seal, Low Side
F4	316 ss Cover; 316L ss Diaphragm; Inert Fill; Direct Connect Seal, High Side and Remote Mount Seal, Low Side
Structure — Prepared for Non-Schneider Electric Model Coded Pressure Seals (Static Pressure Rating Limited by Seal)[143]	
SA	316 ss Cover; 316L ss Diaphragm; Silicone Fill; Remote Mount Seals, Both Sides
SB	316 ss Cover; 316L ss Diaphragm; Inert Fill; Remote Mount Seals, Both Sides
SC	316 ss, 1/2 NPT Cover; 316L ss Diaphragm; Silicone Fill; Remote Mount Seal, High Side
SD	316 ss, 1/2 NPT Cover; 316L ss Diaphragm; Inert Fill; Remote Mount Seal, High Side
SE	316 ss, 1/2 NPT Cover; 316L ss Diaphragm; Silicone Fill; Remote Mount Seal, Low Side
SF	316 ss, 1/2 NPT Cover; 316L ss Diaphragm; Inert Fill; Remote Mount Seal, Low Side

141. Maximum static pressure can be derated by optional selections.
142. Not available with the Value (05S) transmitter.
143. Not available with options -X1, -X2, or -X3.
144. Both transmitter and pressure seal model numbers are required. See PSS 2A-1Z11 B for pressure seal model codes.
145. Remote seal models that may be specified are PSFPS, PSFES, PSFAR, PSTAR, PSISR, PSSCR, and PSSSR.

Code	Description
Span Limits	
A[146]	With -T or -F Electronics: n/a With -V Electronics: 0.12 and 7.5 kPa; 0.5 and 30 in$H_2$0; 1.2 and 75 mbar
B	With -T or -F Electronics: 0.12 and 50 kPa; 0.5 and 200 inH_2O; 1.2 and 500 mbar With -V Electronics: 0.87 and 50 kPa; 3.5 and 200 inH_2O; 8.7 and 500 mbar
C	With -T or -F Electronics: 0.62 and 250 kPa; 2.5 and 1000 inH_2O; 6.2 and 2500 mbar With -V Electronics: 7 and 210 kPa; 28 and 840 inH_2O; 70 and 2100 mbar
D	With -T or -F Electronics: 0.026 and 2.07 MPa; 3.75 and 300 psi; 0.26 and 20.7 bar With -V Electronics: 0.069 and 2.07 MPa; 10 and 300 psi; 0.69 and 20.7 bar
E[147]	With -T or -F Electronics: 0.26 and 20.7 MPa; 37.5 and 3000 psi; 2.6 and 207 bar With -V Electronics: 0.69 and 20.7 MPa; 100 and 3000 psi; 6.9 and 207 bar
Process Connector Type (Same Material as the Process Cover)	
0	None
1	1/4 NPT[147 148 149]
2	1/2 NPT[147 148]
3	RC 1/4[147 148 149]
4	RC 1/2[147 148]
6	1/2 Schedule 80 Weld Neck[147 148 149]
7	None; PVDF insert tapped for 1/2 NPT process inlet located on side of process cover[150]
Conduit Connection and Housing Material	
1	1/2 NPT Conduit Connection, Both Sides, Aluminum Housing
3	1/2 NPT Conduit Connection, Both Sides, 316 ss Housing
5	M20 Conduit Connection, Both Sides, Aluminum Housing
6	M20 Conduit Connection, Both Sides, 316 ss Housing
Electrical Certifications	
AA	ATEX intrinsically safe, Ex ia IIC[151]
AD	ATEX flameproof, Ex d IIC
AM	ATEX multiple certifications (includes ATEX Codes AA and AN)[151]
AN	ATEX protection type n, Ex ic IIC, or Ex nA[151]
AP	ATEX multiple certifications (includes ATEX Codes AA, AD and AN)[151]
BA	INMETRO intrinsically safe, Ex ia IIC[151]
BD	INMETRO flameproof, Ex d IIC
BP	INMETRO multiple certifications (includes INMETRO Codes BA and BD)[151]

146. Span limit code A is not available with pressure seals, except for sanitary spud seal models PSSSR-*4 and PSSST-*4.
147. Not available with Structure codes 78 and 79 (PVDF process covers).
148. Not available with structures that have seals on both sides.
149. Not available with structures that have C276 process covers.
150. Available only with Structure codes 78 and 79 (PVDF process covers).
151. Not available with Electronics Version -V.

Code	Description
CA	CSA intrinsically safe, Zone certified Ex ia
CD	CSA zone certified flameproof Ex d IIC; also explosion proof, dust ignition-proof
CM	CSA multiple certifications (includes CSA Codes CA and CN)
CN	CSA non-incendive, Zone certified Ex nA IIC
CP	CSA multiple certifications (includes CSA Codes CA, CD and CN)
DA	Multi-marked ATEX and IECEx intrinsically safe, Ex ia IIC[152]
DD	Multi-marked ATEX and IECEx flameproof, Ex d IIC
DM	Multi-marked ATEX and IECEx multiple certifications, ia, ic[152]
DN	Multi-marked ATEX and IECEx protection type n, Ex ic IIC[152]
DP	Multi-marked ATEX and IECEx multiple certifications, ia, ic, and d[152]
EA	IECEx intrinsically safe, Ex ia IIC[152]
ED	IECEx flameproof, Ex d IIC
EM	IECEx multiple certifications, ia, ic, nA[152]
EN	IECEx protection type n, Ex ic IIC, or Ex nA[152]
EP	IECEx multiple certifications, ia, ic, nA, and d[152]
FA	FM Classes I, II and III Division 1 intrinsically safe, AEx ia IIC
FD	FM Classes I, II and III Division 1 explosion proof, dust-ignition proof, Zone approved AEx d IIC
FM	FM multiple certifications (includes FM Codes FA or FN)
FN	Classes I, II and III FM Division 2 non-incendive, Zone approved AEx nA IIC
FP	FM multiple certifications (includes FM Codes FA, FD or FN)
KD	KOSHA Ex d[153]
RA	EAC intrinsically safe, Ex ia[152]
RD	EAC flameproof, Ex d[152]
RN	EAC protection type n, Ex ic IIC or Ex nA[152]
MA	Multi-marked for ATEX, CSA, and FM Intrinsically Safe Application[152]
ZZ	No certification
Optional Mounting Bracket Sets[154] [155]	
-M1	Standard Style Painted Steel Bracket with Plated Steel Bolts
-M2	Standard Style Stainless Steel Bracket with Stainless Steel Bolts
-M3	Universal Style Stainless Steel Bracket with Stainless Steel Bolts

152. Not available with Electronics Version -V.
153. Available only with Electronics Version -V.
154. Not available with Structure codes F1, F2, F3, and F4 (direct connect seal).
155. Not available with Low Profile (LP1 and LP2) structures.

Code	Description
Optional Adapter Plates[156 157 158]	
-P1	Adapter Set for MC Coplanar Manifolds, B7 Bolts[159]
-P2	Adapter Set for MC Coplanar Manifolds, 316 ss Bolts[160]
-P3	Adapter Set for MC Coplanar Manifolds, 17-4 ss Bolts[161]
-P4	Adapter Set for MC Coplanar Manifolds, B7M Bolts[162]
-P5	Adapter Set for MT3 Coplanar Manifolds, Traditional Flange, B7 Bolts[159]
-P6	Adapter Set for MT3 Coplanar Manifolds, Traditional Flange, 316 ss Bolts[160]
-P7	Adapter Set for MT3 Coplanar Manifolds, Traditional Flange, 17-4 ss Bolts[161]
-P8	Adapter Set for MT3 Coplanar Manifolds, Traditional Flange, B7M Bolts[162]
Options for Digital Indicator with Pushbuttons	
-L1	Digital Display, Pushbuttons and Window Cover[163]
-L2	Substitute Solid Cover over Digital Display[164]
Optional IEC 61518 Construction[158 165 166]	
-D1	Single-Ended Process Cover with B7 Steel Bolt; No Connector Screw; MWP=2320 psi
-D2	Double-Ended Process Cover[167] with B7 Steel Bolt; Size M10 Steel Connector Screw; MWP=1500 psi[168 169]
-D3	Single-Ended Process Cover with B7 Steel Bolt; No Connector Screw; MWP=3626 psi
-D4	Double-Ended Process Cover[167] with B7 Steel Bolt; Size 7/16 Steel Connector Screw; MWP=1500 psi[168 169]
-D5	Single-Ended Process Cover with 316 ss Bolt; No Connector Screw; MWP=2175 psi
-D6	Double-Ended Process Cover[167] with 316 ss Bolt; Size 7/16 316 ss Connector Screw; MWP=1500 psi[168 169]
-D7	Single-Ended Process Cover with 17-4 PH Bolt; No Connector Screw; MWP=3626 psi
-D8	Double-Ended Process Cover[167] with 17-4 PH Bolt; Size 7/16 17-4 PH Connector Screw; MWP=1500 psi[168 169]
-D9	Single-Ended Process Cover with 17-4 PH Bolt; No Connector Screw; MWP=5800 psi
Optional Cleaning and Preparation	
-X1	Unit Degreased – for Silicone Fill Sensors Only[170]
-X2	Cleaned and Prepared for Oxygen Service – for Inert Fill Sensors Only[171 172]
-X3	Cleaned and Prepared for Chlorine Service[171 173]

156. Not available with optional IEC 61518 Construction codes -D1 through -D9.
157. Not available with structures prepared for pressure seals.
158. Available only with Process Connector Type code 0.
159. Not available with Bolting Options -B1, -B2, or -B3.
160. Available only with option -B1.
161. Available only with option -B2.
162. Available only with option -B3.
163. Not available with Electronics Version -V.
164. Available only with Electronics Version -V.
165. See *Maximum Static, Overrange, and Proof Pressure Ratings, page 14* for pressure deratings when certain IEC 61518 options and Bolting Options -B1 or -B3 are specified.
166. Available only with Structure codes 20 through 27. Not available with options -V and -V1.
167. Blind connector supplied.
168. Not available with Mounting Bracket Set options -M1, -M2, and -M3.
169. Temperature limits are derated to -10 and +80°C (14 and 176°F) for optional IEC 61518 Construction codes -D2, -D4, -D6, and -D8 only.
170. Available only with structures that have silicone fill and are not prepared for seals.
171. Available only with structures that have inert fill (excluding Structure code 79) and are not prepared for seals.
172. After units are cleaned and reassembled for oxygen service, they are not rechecked for accuracy. This may affect performance for DP and biplanar GP transmitters.
173. For -X3, standard bolting is replaced with 17-4 ph ss bolts and nuts. Therefore, Bolting codes -B1, -B2, and -B3 are not available with -X3.

Code	Description
Optional Bolting (Process Covers and Process Connectors)[174] [175] [176] [177]	
-B1	316 ss Bolts and Nuts (high corrosion protection; MWP derated to 2175 psi)[178]
-B2	17-4 PH ss Bolts and Nuts (bright acid tin coated corrosion protection with no pressure derating)
-B3	B7M Bolts and 2HM Nuts (conforms to NACE MR0175, Class II; MWP derated to 2900 psi)[178]
Optional Conduit Thread Adapters[179] [180]	
-A1	Hawke-Type 1/2 NPT Brass Cable Gland
-A3	M20 Connector
Optional Custom Factory Configuration	
-C1	Custom Factory Calibration (Calibration and Unit Tags Required)[181]
-C2	Custom Factory Configuration (requires Configuration Form to be filled out)
Optional Electronics Housing Features	
-Z1	External Zero Adjustment[182]
-Z2	Custody Transfer Lock and Seal[183]
-Z3	External Zero Adjustment and Custody Transfer Lock/Seal[182] [183]
Optional Ermeto Connectors	
-E3	316 ss for Connecting 6 mm Tubing to 1/4 NPT Process Connector[184]
-E4	316 ss for Connecting 12 mm Tubing to 1/2 NPT Process Connector[185]
Optional Manifold Configurations	
-H1	Manifold Mounted to Transmitter and Pressure Tested (1.5 times transmitter range or 1.5 times manifold rating, whichever is less)
-H2	Manifold Mounted to Transmitter and Pressure Tested (Certificate)
Optional SIL 2 Selections[186]	
-S1	Yellow Cover for SIL2 on Electronics/Indicator Side of Housing
-S2	Red Cover for SIL2 on Electronics/Indicator Side of Housing

174. Not available with Structure codes 78 and 79 (PVDF process covers).
175. Not available with optional IEC 61518 Construction codes -D1 through -D9.
176. For stainless steel bolts with IEC 61518 construction, specify -D5 to -D9, as required, instead of -B1 or -B2.
177. Not available with structures that have Monel process covers.
178. See *Maximum Static, Overrange, and Proof Pressure Ratings, page 14* for pressure deratings when certain IEC 61518 options and Bolting Options -B1 or -B3 are specified.
179. Not available with Electrical Certification codes that end in D or P.
180. Available with Conduit Connection and Housing Material codes 1 and 3 only.
181. Not available as a selection for the Value (05S) transmitter because it is standard for these models.
182. Not available with Electronics Version -V.
183. Cover locks are provided as standard with Electrical Certification codes that end in D or P (flameproof).
184. Available only with Structure codes 20 to 27, and Process Connector codes 0 and 1.
185. Available only with Structure codes 20 to 27, and Process Connector code 2.
186. Available only with Electronics Version -T.

Code	Description
Miscellaneous Optional Selections	
-G1	Metal O-Ring for Pressure Seals in Vacuum Service[187] [188]
-GP	Gold Plated Diaphragm[189] [190] [191]
-J	Low Temperature Operative Limit -50°C (-58°F)[192] [193] [194] [195]
-K2	FoxDoc DVD-ROM (instead of “Getting Started” Guide)
-T	Supplemental Customer Tag (Stainless Steel Tag Wired onto Transmitter)
-V	Supply Vent Screw in Side of Each Process Cover[196]
-V1	Omit Vent Screw in Side of Each Process Cover[197]
-Y	Static Pressure Rating to 40 MPa (5800 psi) and 17-4 ss Bolts and Nuts[193] [198] [199] [200]

187. When the pressure seal is used in vacuum applications, -G1 is required. This selection substitutes a vacuum service metal gasket for the standard PTFE process cover gasket.
188. Available only with structure codes for pressure seals.
189. Available only with Structure code 22.
190. Not available with options -X1, -X2, or -X3.
191. Not available with the Value (05S) transmitter.
192. Not available with Electronics Version -V.
193. Not available with Structure codes 78 and 79 (PVDF process covers).
194. Not available with Optional IEC 61518 Construction codes -D2, -D4, -D6, and -D8.
195. Not available with Traditional, LP1, or LP2 structures with inert fill fluid.
196. Available only with Traditional Structure codes 20 to 49.
197. Available only with LP1 Direct Mount structures with 316 ss process covers.
198. Not available with structures prepared for pressure seals.
199. Not available with Bolting Options -B1, -B2, or -B3.
200. Not available with structures that have Monel process covers.

Transmitter Parts

Warning

⚠ WARNING

RISK OF MOISTURE INGRESS

To maintain IEC IP66/IP67 and NEMA Type 4X protection, plug the unused conduit opening with the metal plug provided. Use a suitable thread sealant on both conduit connections. In addition, the threaded housing covers must be installed. Turn covers to seat the o-ring into the housing, then continue to hand-tighten until the cover contacts the housing metal-to-metal.

Failure to follow these instructions can result in death or serious injury.

Parts for Direct Connect AP and GP Transmitters

Figure 80 - Direct Connect Transmitters

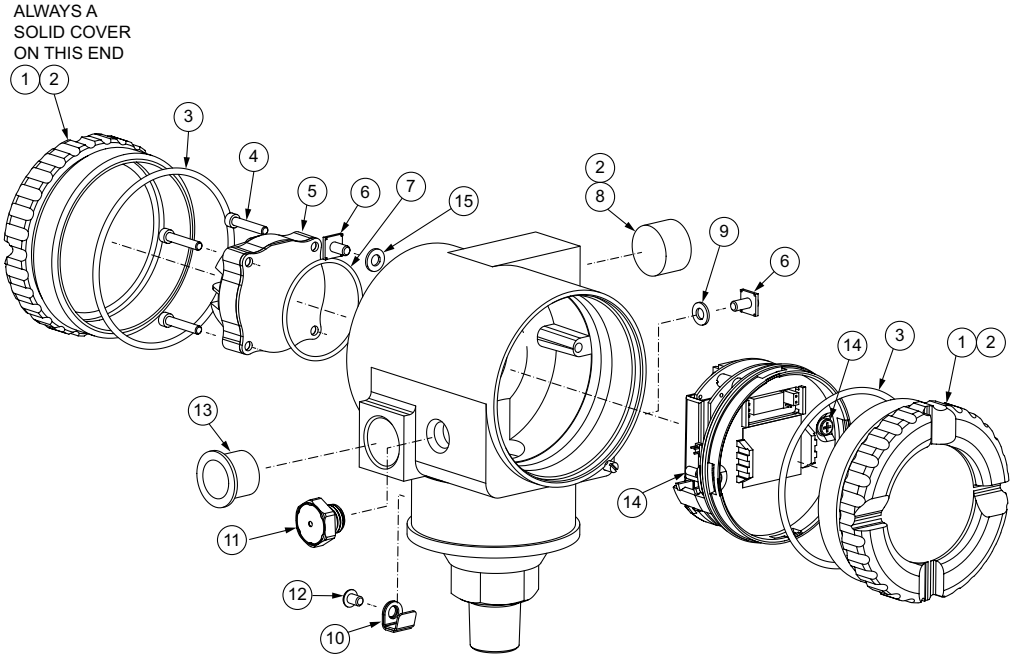

Table 18 - Parts for Direct Connect Transmitters

Item	Part No.	Qty.	Part Name
1	Cover, Electronics Housing; see *Housing Covers, page 152*. Also see *LCD Indicator (Digital Display) Assembly (Option -L1), page 159*.		
2	**Below**	1	**Grease, 1.75 oz. Tube**
	X0180JB		Lubit-8 for Transmitters with Aluminum Housing
	X0114AA		Never-Seez for Transmitters with Stainless Steel Housing
3	**Below**	2	**O-Ring, Cover**
	X0201FC		without -J Option
	X0201QP		with -J Option

Table 18 - Parts for Direct Connect Transmitters (Continued)

Item	Part No.	Qty.	Part Name
4	**Below**	4	**Screw, Terminal Block Assembly, 0.138-32 x 0.750**
	X0133UW		Steel Screw - used with Aluminum Housing
	X0133VP		316 ss Screw - used with 316 ss Housing
5	D0149HN	1	Terminal Block Assembly (Electronics Version -F)
6	D0162VJ	2	Screw Assembly, Ground, 0.164-32 x 0.750
7	**Below**	1	**O-Ring**
	X0144KR		without -J Option
	X0201QL		with -J Option
8	**Below**	1	**Pipe Plug for Unused Conduit Connection – see *Warning, page 138***
	B0139CA		Aluminum, 1/2 NPT; with Housing Code 1
	B0139SK		316 ss, 1/2 NPT; with Housing Code 3
	D0179FJ		Aluminum, M20; with Housing Code 5
	D0179FK		316 ss, M20; with Housing Code 6
9	X0173YA	1	Washer, Ext. Ground, 0.196 ID, 0.383 OD
10	D0197PS	1	Retention Clip
11	X0179ME	1	Vent Plug; for GP Transmitter with sanitary or pulp and paper seals only
12	X0174EX	1	Screw, Button Head; 0.164-32 x 0.25 long
13	S0102BT	1	Plug, Poly (remove prior to Transmitter installation)
14	**Below**	2	**Screw, Captive, Pan Head, 0.138-32 x 0.615**
	D0162VM		Steel Screw - used with Aluminum Housing
	D0166CY		316 ss Screw - used with 316 ss Housing

Parts for Biplanar AP and GP Transmitters

Figure 81 - Biplanar Transmitter Topworks

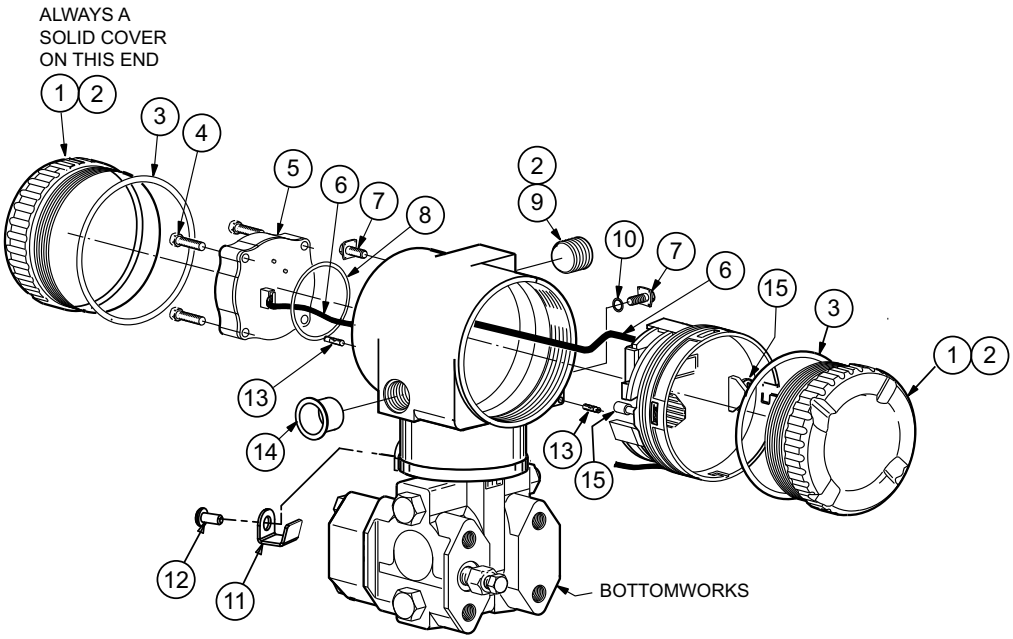

Table 19 - Parts for Biplanar Transmitter Topworks

Item	Part No.	Qty.	Part Name
1	Cover, Electronics Housing; see *Housing Covers, page 152* Also see *LCD Indicator (Digital Display) Assembly (Option -L1), page 159*.		
2	**Below**	1	**Grease, 1.75 oz. Tube**
	X0180JB		Lubit-8 for Transmitters with Aluminum Housing
	X0114AA		Never-Seez for Transmitters with Stainless Steel Housing
3	**Below**	2	**O-Ring, Cover**
	X0201FC		without -J option
	X0201QP		with -J option
4	**Below**	4	**Screw, Terminal Block Assembly, 0.138-32 x 0.750**
	X0133UW		Steel Screw - used with Aluminum Housing
	X0133VP		316 ss Screw - used with 316 ss Housing
5	D0149HN	1	Terminal Block Assembly with Power Cable (Electronics Version -F)
6	n/a	n/a	Power Cable, included with Terminal Block Assembly
7	D0162VJ	4	Screw Assembly, Ground, 0.164-32 x 0.375
8	**Below**	1	**O-Ring**
	X0144KR		without -J option
	X0201QL		with -J option

Table 19 - Parts for Biplanar Transmitter Topworks (Continued)

Item	Part No.	Qty.	Part Name
9	**Below**	1	**Pipe Plug for Unused Conduit Connection – see *Warning, page 138***
	B0139CA		Aluminum,1/2 NPT; with Housing Code 1
	B0139SK		316 ss, 1/2 NPT; with Housing Code 3
	D0179FJ		Aluminum, M20; with Housing Code 5
	D0179FK		316 ss, M20; with Housing Code 6
10	X0173YA	1	Washer, Ext. Ground, 0.196 ID, 0.383 OD
11	D0197PS	1	Retention Clip
12	X0174EX	1	Screw, Button Hd; 0.164-32 x 0.25
13	D0162WM	2	Screw, Lock, 0.164-32; part of Optional Selection -Z2; see *Custody Transfer Lock and Seal (Option -Z2), page 160*
14	S0102BT	1	Plug, Poly (remove prior to Transmitter installation)
15	**Below**	2	**Screw, Captive, Pan Head, 0.138-32 x 0.615**
	D0162VM		Steel Screw - used with Aluminum Housing
	D0166CY		316 ss Screw - used with 316 ss Housing

Figure 82 - Biplanar Transmitter Bottomworks for Use with Traditional Structures

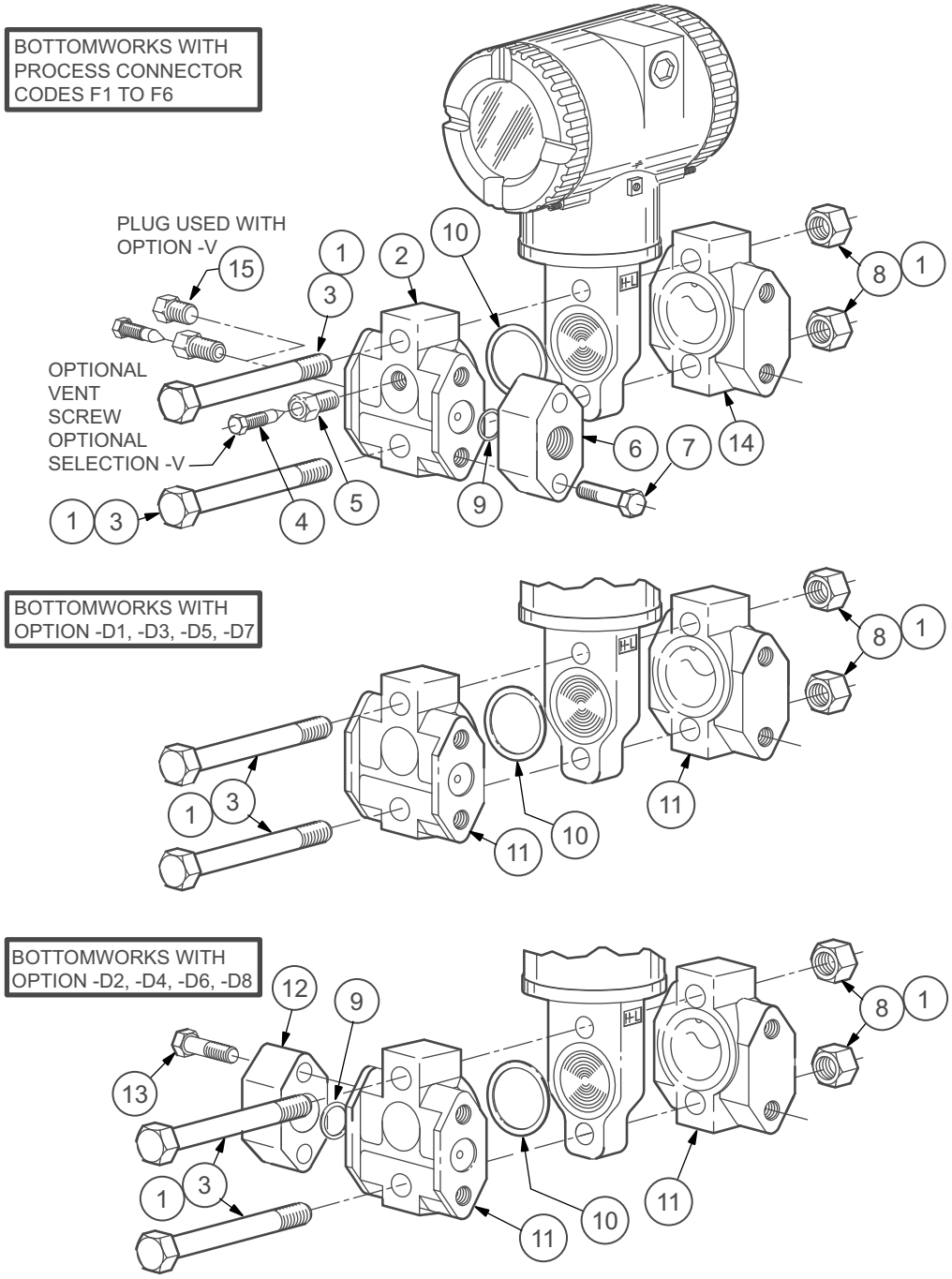

Table 20 - Parts for Biplanar Transmitter Bottomworks for Use with Traditional Structures

Item	Part No.	Qty.	Part Name
1	**Below**	1	**Grease, 1.75 oz. Tube**
	X0118CC		Lubriplate for Transmitters with Aluminum Housing
	X0114AA		Never-Seez for Transmitters with Stainless Steel Housing
2	**Below**	1	**Process Cover (Process Connector Type codes F1 - F6)**[201]
	D0161NA		High Side, 316 ss
	D0161NC		High Side, Nickel Alloy[202]
	D0161ND		High Side, Monel
	D0161NE		Side Vent, 316 ss
	D0161NG		Side Vent, Nickel Alloy[202]
	D0161NH		Side Vent, Monel
3	**Below**	2	**Screw, hex head, 0.500-13 x 3.5**
	X0173RP		2H (ASTM A193, Gr. B7 [std])
	X0173TQ		316 ss (ASTM F593, Group 2) (Options -B1. -D5, -D6)
	X0173UK		ASTM A193, Gr. B7M (Option -B3)
	X0173TD		17-4 ss (ASTM A564, Type 630) (Options -B2, -D7, -D8)
4	**Below**	2	**Vent Screw**
	B0138MJ		316 ss (std)
	B0138MK		Monel
	D0175PQ		Nickel alloy[201 203]
5	**Below**	1	**Vent Plug**[204]
	D0161QT		316 ss (std)
	D0161QU		Monel[201]
	D0175PP		Nickel alloy[201 203]
6	1 Process Connector (see *Process Connectors for Biplanar Transmitters with Traditional Structures, page 144*)		
7	**Below**	2	**Screw, hex head, 0.438-20 x 1.5 (for threaded connectors, Codes F1 - F4)**
	X0100MN		ASTM A193 Gr. B7 (std)
	X0171VP		ASTM A193, Gr. B7M (Option -B3)
	X0118AX		17-4 Stainless Steel (Options -B2, -D7, -D8)
	N1205RQ		316 ss (Options -B1, -D5, -D6)
	Below		**Screw, hex head, 0.438-20 x 1.0 (for weld neck connectors, Code F6)**
	X0100NT		ASTM A193, Gr. B7 (std)
	X0171VN		ASTM A193, Gr. B7M (Option -B3)
	X0118AY		17-4 Stainless Steel (Option -B2)
	X0173TP		316 ss (Option -B1)

201. Metallic process wetted material conforming to NACE Standard MR0175.
202. Equivalent to Hastelloy® C. Hastelloy is a registered trademark of Haynes International, Inc.
203. Equivalent to Hastelloy® C-276. Hastelloy is a registered trademark of Haynes International, Inc.
204. For simplified calibration, install F0101ES screw for pressure up to 0.7 MPa (100 psi).

Table 20 - Parts for Biplanar Transmitter Bottomworks for Use with Traditional Structures (Continued)

Item	Part No.	Qty.	Part Name
8	**Below**	2	**Nut, hex head, 0.500-13**
	X0173RN		Nut, hex head, 0.500-13
	X0173UL		ASTM A194, Gr. 2HM (Option -B3)
	X0173UJ		17-4 ss (ASTM F594, Group 2) (Options -B2, -D7, -D8)
	X0173TR		316 ss (ASTM F594, Group 2) (Options -B1, -D5, -D6)
9	D0114RB	1	Gasket, PTFE
10	D0161QQ	1	Glass-filled PTFE (standard)
11	**Below**	1	**Cover, 316 ss**
	D0161NK		High Side, Single Ended Process Connection M10, ss (Option -D1)
	D0161NM		High Side, Single Ended Process Connection 7/16, ss (Options -D3, -D5, -D7)
	D0161NN		Double Ended Process Connection M10, ss (Option -D2)
	D0161NA		Double Ended Process Connection 7/16, ss (Options -D4, -D6, -D8)
12	D0153RK	1	Kidney Flange, Blind, 316 ss - for use with Options -D2, -D4, -D6, and -D8 (for double-ended process cover)
13	**Below**	4	**Screw, Hex Head, Steel, for Blind Kidney Flange - for Options -D2, -D4, -D6, -D8**
	X0173MJ		M10 x 1.5 x 40 mm, for Option -D2
	X0100MN		0.437-20 x 1.5 in, for Options -D4, -D6, and -D8
14	**Below**	1	**Cover, Low Side - for Process Connector Codes F1 - F6**
	D0161NR		M10, ss
	D0161NP		7/16, ss
15	**Below**	1	**Pipe Plug**
	D0161LU		316 ss (std)
	D0161LV		Monel
	D0161LW		Nickel alloy[205]

Process Connectors

Table 21 - Process Connectors for Biplanar Transmitters with Traditional Structures

Process Connector Code	Connector Description	Used with Cover Material		
		Stainless Steel	Nickel Alloy[206]	Monel
F1	1/4 NPT	N0141XT	–	N0141XK
F2	1/2 NPT	N0141XN	B0139JW	N0141XL
F3	Rc 1/4	B0139BD	–	N0139BC

205. Equivalent to Hastelloy® C-276. Hastelloy is a registered trademark of Haynes International, Inc.
206. Equivalent to Hastelloy® C. Hastelloy is a registered trademark of Haynes International, Inc.

Table 21 - Process Connectors for Biplanar Transmitters with Traditional Structures (Continued)

Process Connector Code	Connector Description	Used with Cover Material		
		Stainless Steel	Nickel Alloy[207]	Monel
F4	Rc 1/2	B0139BG	B0139JV	B0139BF
F6	1/2 Schedule 80 Weld Neck	N0141XR	–	D0143CZ

Parts for DP Transmitters

Figure 83 - DP Transmitter Topworks

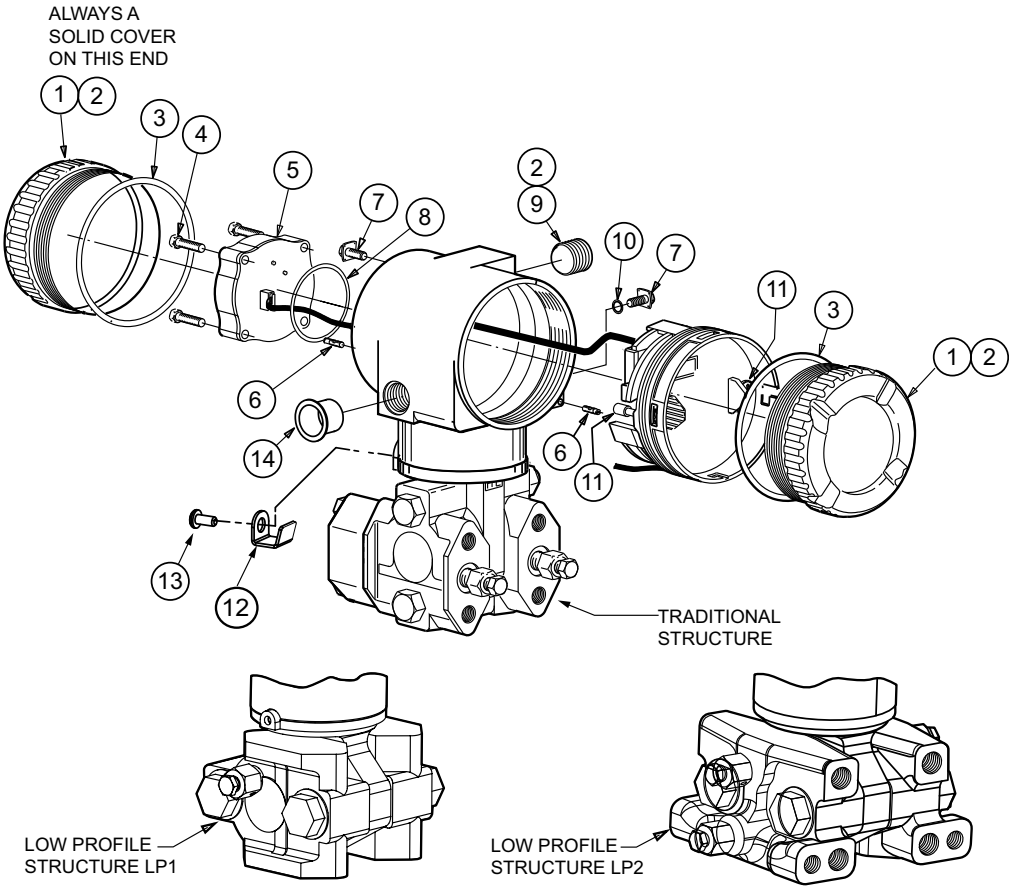

Table 22 - Parts for DP Transmitter Topworks

Item	Part No.	Qty.	Part Name
1	Cover, Electronics Housing; see *Housing Covers, page 152*. Also see *LCD Indicator (Digital Display) Assembly (Option -L1), page 159*.		
2	**Below**	1	**Grease, 1.75 oz. Tube**
	X0180JB		Lubit-8 for Transmitters with Aluminum Housing
	X0114AA		Never-Seez for Transmitters with Stainless Steel Housing
3	**Below**	2	**O-Ring, Cover**
	X0201FC		without -J option
	X0201QP		with -J option

207. Equivalent to Hastelloy® C. Hastelloy is a registered trademark of Haynes International, Inc.

Table 22 - Parts for DP Transmitter Topworks (Continued)

Item	Part No.	Qty.	Part Name
4	**Below**	4	**Screw, Terminal Block Assembly, 0.138-32 x 0.750**
	X0133UW		Steel Screw - used with Aluminum Housing
	X0133VP		316 ss Screw - used with 316 ss Housing
5	D0149HN	1	Terminal Block Assembly with Power Cable (Electronics Version -F)
6	D0162WM	2	Screw, Lock, 0.164-32; part of Optional Selection -Z2; see *Custody Transfer Lock and Seal (Option -Z2), page 160*
7	D0162VJ	4	Screw Assembly, Ground, 0.164-32 x 0.375
8	**Below**	1	**O-Ring**
	X0144KR		without -J option
	X0201QL		with -J option
9	**Below**	1	**Pipe Plug for Unused Conduit Connection – see *Warning, page 138***
	B0139CA		Aluminum,1/2 NPT; with Housing Code 1
	B0139SK		316 ss, 1/2 NPT; with Housing Code 3
	D0179FJ		Aluminum, M20; with Housing Code 5
	D0179FK		316 ss, M20; with Housing Code 6
10	X0173YA	1	Washer, Ext. Ground, 0.196 ID, 0.383 OD
11	Below	2	**Screw, Captive, Pan Head, 0.138-32 x 0.615**
	D0162VM		Steel Screw - used with Aluminum Housing
	D0166CY		316 ss Screw - used with 316 ss Housing
12	D0197PS	1	Retention Clip
13	X0174EX	1	Button Head Screw; 0.164-32 x 0.25 long
14	S0102BT	1	Poly Plug (remove prior to Transmitter installation)

Figure 84 - DP Transmitter Bottomworks for Use with Traditional Structures

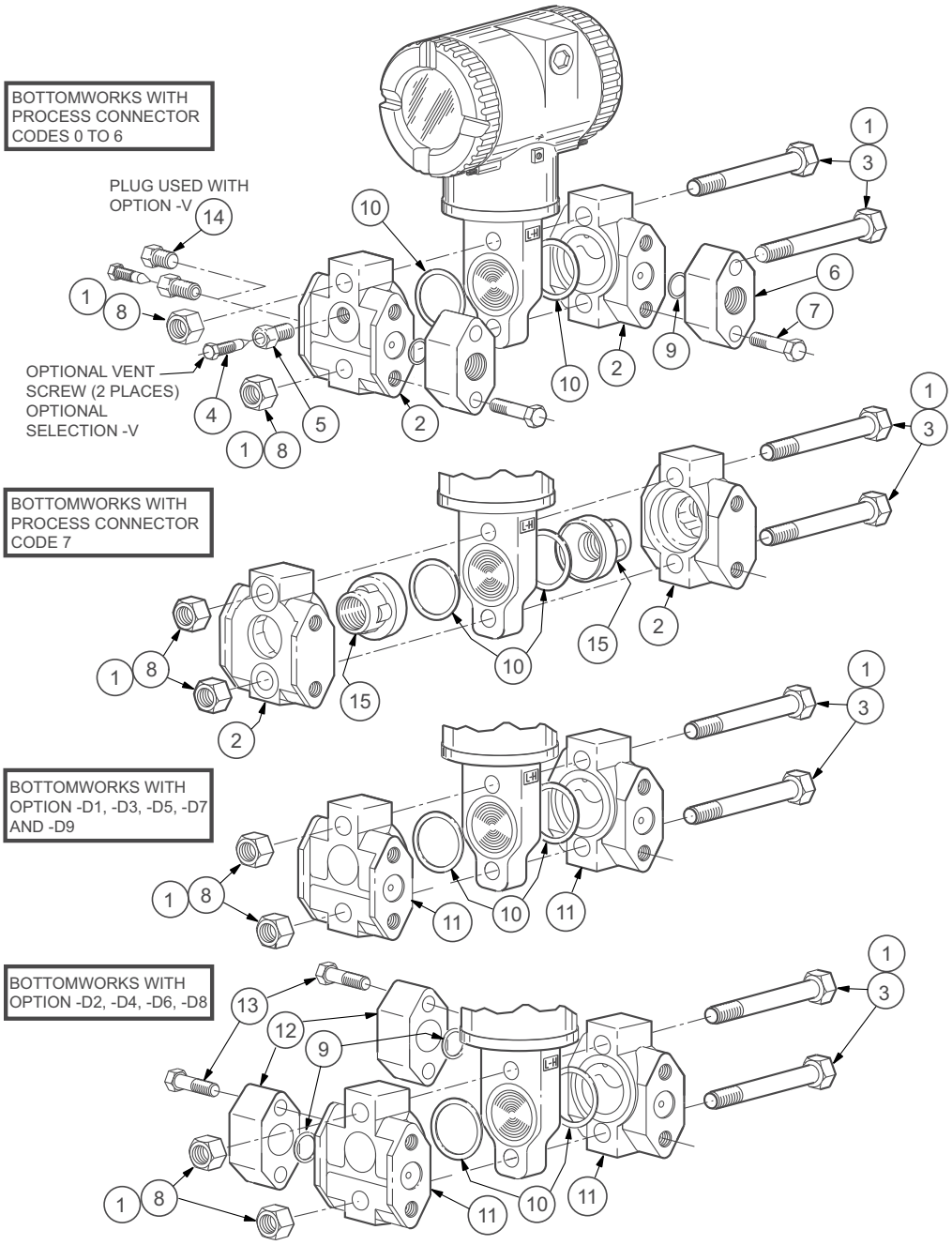

Table 23 - Parts for DP Transmitter Bottomworks for Use with Traditional Structures

Item	Part No.	Qty.	Part Name
1	**Below**	1	**Grease, 1.75 oz. Tube**
	X0118CC		Lubriplate for Transmitters with Aluminum Housing
	X0114AA		Never-Seez for Transmitters with Stainless Steel Housing
2	**Below**	2	**Process Cover for use with Process Connection Codes 0–6**[208]
	D0161NA		316 ss
	D0161NC		Nickel Alloy[209]
	D0161ND		Monel
	Below		**Side Vent Process Cover for use with Process Connection Codes 0-6**[208]
	D0161NE		316 ss
	D0161NG		Nickel Alloy[209]
	D0161NH		Monel
	D0175TB		316 ss Cover for use with Process Connector Code 7 only (PVDF insert fits into cover)
3	**Below**	2	**Screw, Hex Head, 0.500-13 x 3.5**
	X0173RP		2H (ASTM A193, Gr. B7 [standard])
	X0173TQ		316 ss (ASTM F593, Group 2) (Options -B1, -D5, -D6)
	B0138MK		ASTM A193, Gr. B7M (Option -B3)
	X0173TD		17-4 ss (ASTM A564, Type 630) (Options -B2, -D7, -D8, -D9)
4	**Below**	2	**Vent Screw**
	B0138MJ		316 ss (standard)
	B0138MK		Monel
	D0175PQ		Nickel Alloy[208 210]
5	**Below**	2	**Vent Plug**[211]
	D0161QT		316 ss (standard)
	D0161QU		Monel
	D0175PP		Nickel Alloy[208 210]
6	2 Process Connectors (see *Process Connectors for Biplanar Transmitters with Traditional Structures, page 144*)		

208. Metallic process wetted material conforming to NACE Standard MR0175.
209. Equivalent to Hastelloy® C. Hastelloy is a registered trademark of Haynes International, Inc.
210. Equivalent to Hastelloy® C-276. Hastelloy is a registered trademark of Haynes International, Inc.
211. For simplified calibration, install F0101ES screw for pressure up to 0.7 MPa (100 psi).

Table 23 - Parts for DP Transmitter Bottomworks for Use with Traditional Structures (Continued)

Item	Part No.	Qty.	Part Name
7	**Below**	4	**Screw, Hex Head, 0.438-20 x 1.5 (for threaded connectors, Codes 1-4)**
	X0100MN		ASTM A193 Gr. B7 (standard)
	X0171VP		ASTM A193, Gr. B7M (Option -B3)
	X0118AX		17-4 Stainless Steel (Options -B2, -D7, -D8, -D9, -Y)
	N1205RQ		316 ss (Options -B1, -D5, -D6)
	Below	4	**Screw, Hex Head, 0.438-20 x 1.0 (for weld neck connectors, Code 6)**
	X0100NT		ASTM A193, Gr. B7 (standard)
	X0171VN		ASTM A193, Gr. B7M (Option -B3)
	X0118AY		17-4 Stainless Steel (Options -B2, -Y)
	X0173TP		316 ss (Option -B1)
8	**Below**	2	**Nut, Hex Head, 0.500-13**
	X0173RN		2H (ASTM A193, Gr. B7) (standard) option
	X0173TR		316 ss (ASTM F594, Group 2) (Options -B1, -D5, -D6)
	X0173UJ		17-4 ss (ASTM F594, Group 2) (Options -B2, -D7, -D8, and -D9)
	X0173UL		ASTM A194, Gr. 2HM (Option -B3)
9	D0114RB	2	Gasket, PTFE
10	**Below**	2	**Gasket, Process Cover**
	D0161QQ		Glass-filled PTFE (Standard)
	X0145MJ		Viton – for use with Process Connector Code 7 only
11	**Below**	1	**Cover, 316 ss - for use with Options -D1, -D3, -D5, -D7, and -D9**
	D0161NK		Single-ended process connection M10 (Option -D1) (High Side)
	D0161NJ		Single-ended process connection M10 (Option -D1) (Low Side)
	D0161NM		Single-ended process connection 7/16 (Options -D3, -D5, -D7) (High Side)
	D0161NL		Single-ended process connection 7/16 (Options -D3, -D5, -D7) (Low Side)
	D0174BU		Single-ended process connection 7/16 (Option -D9) (High Side)
	D0174BT		Single-ended process connection 7/16 (Option -D9) (Low Side)
	Below	2	**Cover, 316 ss - for use with Options -D2, -D4, -D6, and -D8**
	D0161NN		Double-ended process connection M10 (Option -D2)
	D0161NA		Double-ended process connection 7/16 (Options -D4, -D6, -D8)
12	D0153RK	2	Kidney Flange, Blind, 316 ss - for use with Options -D2, -D4, -D6, and -D8 (for double-ended process cover)
13	**Below**	4	**Screw, Hex Head, steel - for use with Options -D2, -D4, -D6, and -D8**
	X0173MJ		M10 x 1.5 x 40 mm, for Option -D2
	X0100MN		0.437-20 x 1.5 in, for Options -D4, -D6, and -D8

Table 23 - Parts for DP Transmitter Bottomworks for Use with Traditional Structures (Continued)

Item	Part No.	Qty.	Part Name
14	**Below**	2	**Pipe Plug, Hex Head, 1/4 NPT**
	D0161LU		316 ss
	D0161LV		Monel
	D0161LW		Nickel Alloy[212]
15	D0175TA	2	Insert, PVDF – for use with Process Connector Code 7 only

Figure 85 - DP Transmitter Bottomworks for Use with Low Profile Structures LP1 and LP2

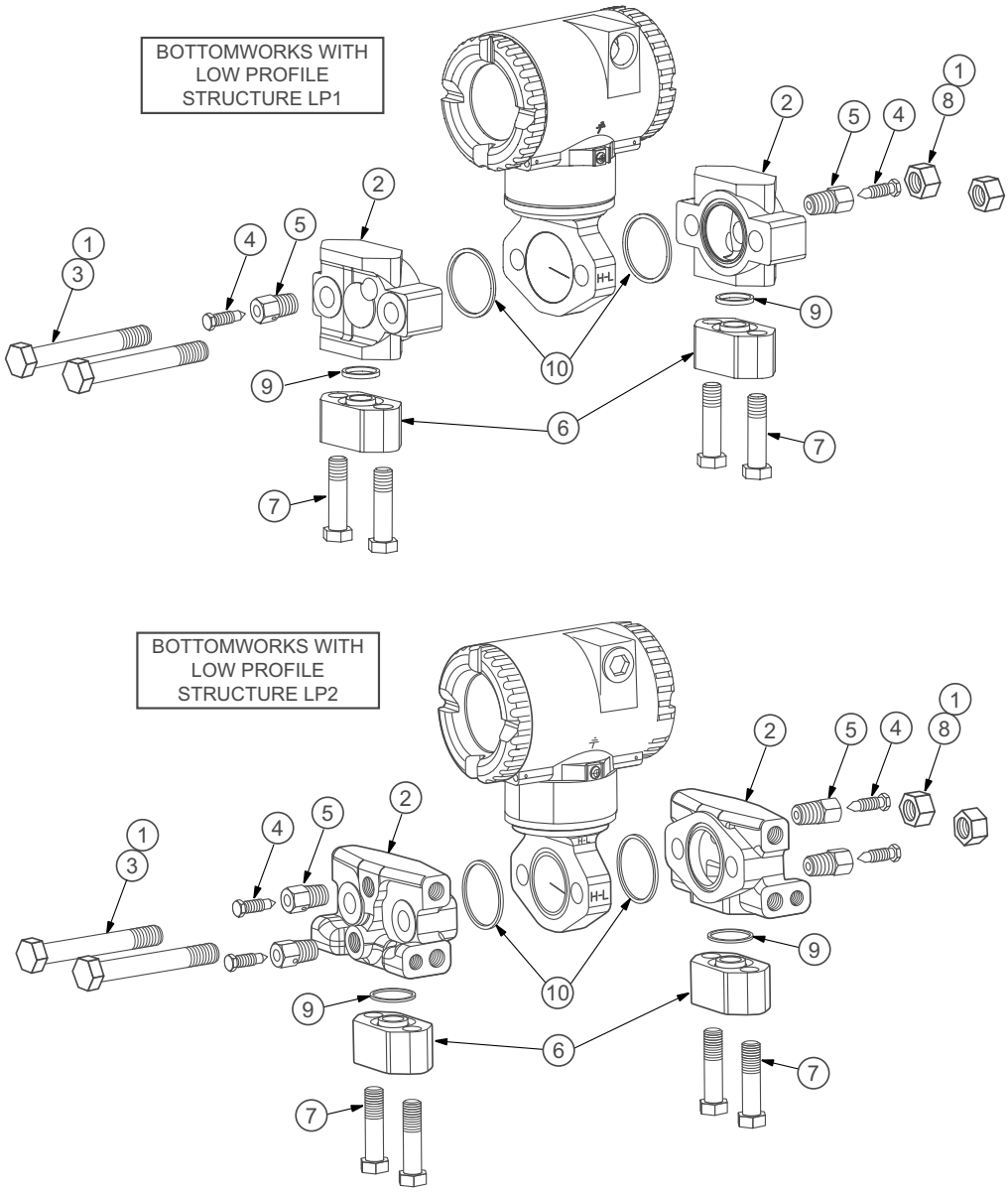

212. Equivalent to Hastelloy® C-276. Hastelloy is a registered trademark of Haynes International, Inc.

Table 24 - Parts for DP Transmitter Bottomworks for Use with Low Profile Structures LP1 and LP2

Item	Part No.	Qty.	Part Name
1	**Below**	1	**Grease, 1.75 oz. Tube**
	X0118CC		Lubriplate for Transmitters with Aluminum Housing
	X0114AA		Never-Seez for Transmitters with Stainless Steel Housing
2	**Below**	1/2[213]	**Process Cover with Process Connection Codes 0-6**[214]
	D0170WW		with LP1; High Side Cover; 316 ss
	D0170WY		with LP1; Low Side Cover; 316 ss
	D0174BZ		with LP2, High and Low Side Covers; 316 ss
3	**Below**	2	**Screw, Hex Head, 0.500-13 x 3.5**
	X0173RP		2H (ASTM A193, Gr. B7 [standard])
	X0173UK		ASTM A193, Gr. B7M (Option -B3)
	X0173TQ		316 ss (ASTM F593, Group 2) (Option -B1)
	X0173TD		17-4 ss (ASTM A564, Type 630) (Options -B2)
4	**Below**	2/4[213]	**Vent Screw**
	B0138MJ		316 ss
	D0175PQ		Nickel Alloy[214 215]
5	**Below**	2/4[213]	**Vent Plug, 316 ss**[216]
	D0161QT		316 ss
	D0175PP		Nickel Alloy[214 215]
6	**Below**	2	**Process Connectors, used with stainless steel cover**
	N0141XT		Tapped for 1/4 NPT, Process Connector Code 1
	N0141XN		Tapped for 1/2 NPT, Process Connector Code 2
	B0139BD		Tapped for R 1/4, Process Connector Code 3
	B0139BG		Tapped for R 1/2, Process Connector Code 4
	N0141XR		1/2 Schedule 80 Weld Neck, Process Connector Code 6
7	**Below**	4	**Screw, Hex Head, 0.438-20 x 1.5 for threaded connectors, Codes 1-4**
	X0100MN		ASTM A193 Gr. B7 (Standard)
	X0171VP		ASTM A193, Gr. B7M (Option -B3)
	N1205RQ		316 ss (Option -B1)
	X0118AX		17-4 Stainless Steel (Option -B2)
	Below		**Screw, Hex Head, 0.438-20 x 1.0 (for weld neck connectors, Code 6)**
	X0100NT		ASTM A193, Gr. B7 (standard)
	X0171VN		ASTM A193, Gr. B7M (Option -B3)
	X0173TP		316 ss (Option -B1)
	X0118AY		17-4 Stainless Steel (Option -B2)

213. The LP2 structure has twice as many vent screws and vent plugs as the LP1 structure. Thus, “2/4” means two for LP1 and four for LP2; “4/8” means four for LP1 and eight for LP2.
214. Metallic process wetted material conforming to NACE Standard MR0175.
215. Equivalent to Hastelloy® C-276. Hastelloy is a registered trademark of Haynes International, Inc.
216. For simplified calibration, install F0101ES screw for pressure up to 0.7 MPa (100 psi).

Table 24 - Parts for DP Transmitter Bottomworks for Use with Low Profile Structures LP1 and LP2 (Continued)

Item	Part No.	Qty.	Part Name
8	**Below**	1	**Nut, 0.500-13**
	X0173RN		2H, ASTM A193, Gr. B7 (standard)
	X0173UL		ASTM A194, Gr. 2HM (Option -B3)
	X0173TR		316 ss, ASTM F594, Group 2 (Option -B1)
	X0173UJ		17-4 ss, ASTM F594, Group 2 (Option -B2)
9	D0114RB	2	Gasket, PTFE; Sensor Assembly to Process Cover
10	D0161QQ	2	Gasket, Glass-Filled PTFE; Process Connector to Process Cover

Housing Covers

Description	Aluminum Housing		Stainless Steel Housing	
	without -J Option	**with -J Option**	**without -J Option**	**with -J Option**
Solid Standard Cover	D0162AP		D0162VD	
Electronics End, Extended Window Cover over Digital Display (Option -L1)	D0162LH	D0219EB	D0162VH	D0219ED

Optional Selections

Refer to *Model Codes, page 121* for available options for each transmitter model.

Mounting Bracket Sets for Direct Connect Transmitters

Figure 86 - Mounting Bracket Sets for Non-Flameproof Direct Connect Transmitter Structures (Options -M1, -M2, -M5, and -M6)

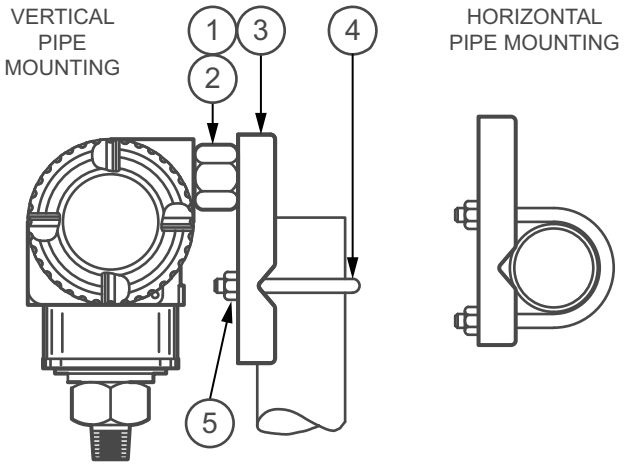

Table 25 - Parts for Mounting Bracket Sets with Painted Steel, for Aluminum Housing (Option -M1)

Item	Part No.	Qty.	Part Name
Set	B0188DL	1	Mounting Bracket Set; for Aluminum Housing; 1/2 NPT Connections (includes items 1–5 below)
1	X0116FB	1	Screw, Hex Head, Plated cs, 0.375-24 x 0.625
2	B0188DN	1	Adapter Plug, 1/2 NPT to 0.375-24, ss
3	N0141ZW	1	Mounting Bracket, Painted Steel
4	D0114SM	1	U-Bolt, Steel
5	0011962	2	Nut, Hex Head, Plated cs, 0.312-18

Table 26 - Parts for Mounting Bracket Sets with Stainless Steel, for Stainless Steel Housing (Option -M2)

Item	Part No.	Qty.	Part Name
Set	N1207AE	1	Mounting Bracket Set; for 316 ss Housing; 1/2 NPT Connections (includes items 1–5 below)
1	P0120RM	1	Screw, Hex Head, ss, 0.375-24 x 0.625
2	B0188DN	1	Adapter Plug, 1/2 NPT to 0.375-24, ss
3	N1205MF	1	Mounting Bracket, ss
4	N1205MX	1	U-Bolt, ss
5	Z1217HV	2	Nut, Hex Head, ss, 0.312-18

Table 27 - Parts for Mounting Bracket Sets with Painted Steel, for Aluminum Housing (Option -M5)

Item	Part No.	Qty.	Part Name
Set	D0179FN	1	Mounting Bracket Set; for Aluminum Housing; M20 Connections (includes items 1–5 below)
1	X0116FB	1	Screw, Hex Head, Plated cs, 0.375-24 x 0.625
2	D0179FM	1	Adapter Plug, M20 to 0.375-24, ss
3	N0141ZW	1	Mounting Bracket, Painted Steel
4	D0114SM	1	U-Bolt, Steel
5	0011962	2	Nut, Hex Head, Plated cs, 0.312-18

Table 28 - Parts for Mounting Bracket Sets with Stainless Steel, for Stainless Steel Housing (Option -M6)

Item	Part No.	Qty.	Part Name
Set	D0179FP	1	Mounting Bracket Set; for 316 ss Housing; M20 Connections (includes items 1–5 below)
1	P0120RM	1	Screw, Hex Head, ss, 0.375-24 x 0.625
2	D0179FM	1	Adapter Plug, M20 to 0.375-24, ss
3	N1205MF	1	Mounting Bracket, ss
4	N1205MX	1	U-Bolt, ss
5	Z1217HV	2	Nut, Hex Head, ss, 0.312-18

Figure 87 - Mounting Bracket Sets for Flameproof Direct Connect Transmitter Structures (Options -M7 and -M8)

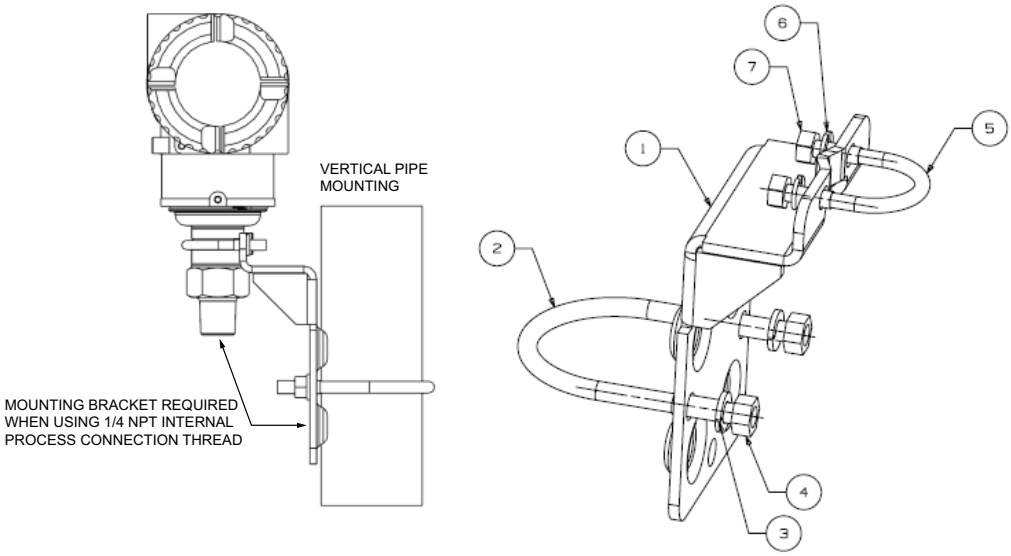

Table 29 - Parts for ATEX Mounting Bracket Sets, Stainless Steel (Option -M7)

Item	Part No.	Qty.	Part Name
Set	D0170ZQ	1	Mounting Bracket Set; ATEX (includes items 1–7 below)
1	D0170ZR	1	Mounting Bracket
2	N1205MX	1	U-Bolt, 5/16-18 ss
3	A2015AB	2	Lock Washer, 5/16-18 ss

Table 29 - Parts for ATEX Mounting Bracket Sets, Stainless Steel (Option -M7) (Continued)

Item	Part No.	Qty.	Part Name
4	X0142BW	2	Nut, Hex Head, 5/16-18 ss
5	D0170ZU	2	U-Bolt, 1/4-20 ss
6	0036504	2	Lock Washer, 1/4 ss
7	X0142BL	2	Nut, Hex Head, 1/4-20 ss

Table 30 - Parts for ATEX Mounting Bracket Sets, Carbon Steel (Option -M8)

Item	Part No.	Qty.	Part Name
Set	D0170ZT	1	Mounting Bracket Set; ATEX (includes items 1–7 below)
1	D0197WF	1	Mounting Bracket
2	D0186MA	1	U-Bolt, 5/16-18 Steel
3	A2004WP	2	Lock Washer, 5/16-18 Steel
4	X0142BV	2	Nut, Hex Head, 5/16-18 Steel
5	D0170ZV	2	U-Bolt, 1/4-20 Steel
6	0042965	2	Lock Washer, 1/4 Steel
7	X0142BK	2	Nut, Hex Head, 1/4-20 Steel

Mounting Bracket Sets for DP and Biplanar Transmitters

Figure 88 - Standard Style Mounting Bracket Sets and Optional Standoff Kits for DP Transmitters (Options -M1 and -M2) and Biplanar Transmitters (Options -M9 and -M0)

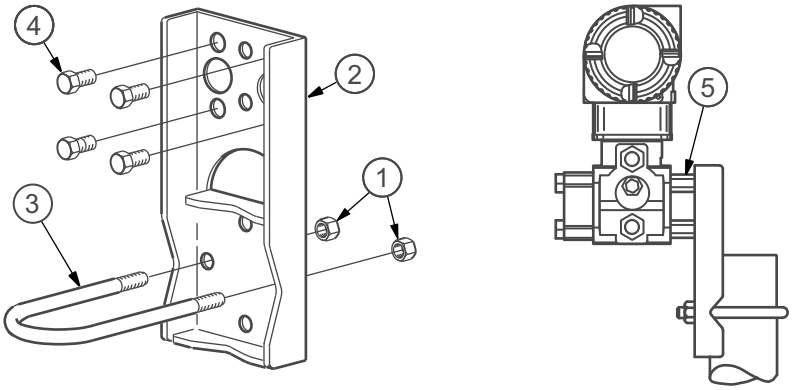

Table 31 - Parts for Standard Style Mounting Bracket Set with Painted Steel (DP Option -M1; Biplanar Option -M9)

Item	Part No.	Qty.	Part Name
Set	N0141ZT	1	Mounting Bracket Set (includes items 1–4 below)
1	0011962	2	Nut, Hex Head, Plated cs, 0.312-18
2	N0141ZW	1	Mounting Bracket, Painted Steel
3	D0114SM	1	U-Bolt, Steel
4	X0100NW	4	Screw, Hex Head, Steel, 0.437-20 x 0.625

Table 32 - Parts for Standard Style Mounting Bracket Set with Stainless Steel (DP Option -M2; Biplanar Option -M0)

Item	Part No.	Qty.	Part Name
Set	N1205YD	1	Mounting Bracket Set (includes items 1–4 below)
1	Z1217HV	2	Nut, Hex Head, ss, 0.312-18
2	N1205MF	1	Mounting Bracket, ss
3	N1205MX	1	U-Bolt, ss
4	P0120RN	4	Screw, Hex Head, ss, 0.437-20 x 0.625

Table 33 - Parts for Optional Standoff Kits (Not Included in -M1/M9 or -M2/M0 Options)

Item	Part No.	Qty.	Part Name
5	D0170ME	1	Kit with Four Steel Standoffs, for use with Option -M1 (DP) or Option -M9 (Biplanar)
	D0170MJ	1	Kit with Four 316 ss Standoffs, for use with Option -M2 (DP) or Option -M0 (Biplanar)

Figure 89 - Universal Style Mounting Bracket Set for DP and Biplanar Transmitters (Option -M3)

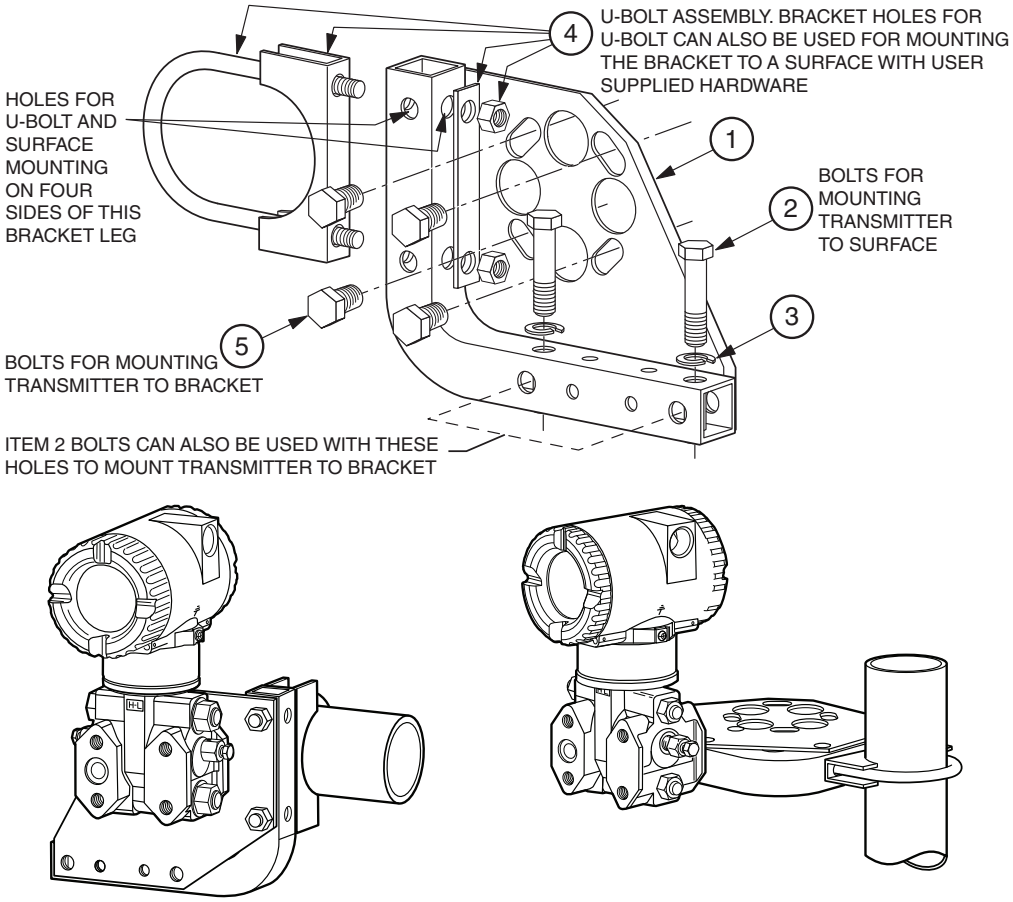

Table 34 - Parts for Universal Style Mounting Bracket Set (Option -M3)

Item	Part No.	Qty.	Part Name
Set	D0170XH	1	Universal Pipe Mounting Set (includes items 1–5 below)
1	D0170VJ	1	Mounting Bracket, ss
2	X0173UR	1	Screw, Hex Head, 0.375-16 x 1.5, , ss
3	A2012TZ	2	Lock Washer, 0.382 I.D., ss
4	D0170VM	1	U-Bolt Assembly, ss, with U-Bolt, 0.312-18; Saddle Clamp; Washer Plate; Nut, Hex Head, 0.312-18
5	P0120RN	4	Screw, hex head, 0.437-20 x 0.625, ss

Vent Screw (Option -V1)

Figure 90 - Vent Screw (Option -V1)

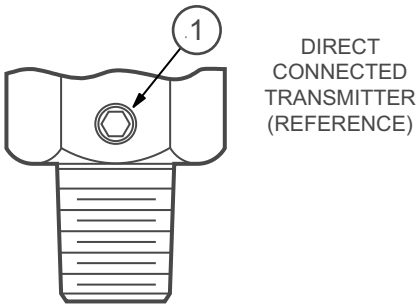

Table 35 - Parts for Vent Screw (Option -V1)

Item	Part No.	Qty.	Part Name
1	D0161SW	1	Vent Screw, 316 ss

Block and Bleed Valve (Options -V2, -V3, and -V4)

Figure 91 - Block and Bleed Valve (Options -V2, -V3, and -V4)

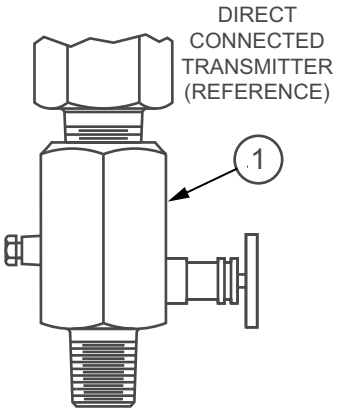

Table 36 - Parts for Block and Bleed Valve (Options -V2, -V3, and -V4)

Item	Part No.	Qty.	Part Name
1	X0172BU	1	Block and Bleed Valve, Carbon Steel (Option -V2)
	X0172BV		Block and Bleed Valve, 316 ss (Option -V3)
	X0172BW		Block and Bleed Valve, 316 ss Body, Monel Trim, NACE Approved (Option -V4)

Adapter Plates (Options -P1 to -P8) for Direct Mounting to Coplanar Manifolds

Figure 92 - Adapter Plates (Options -P1 to -P8) for Direct Mounting to Coplanar Manifolds

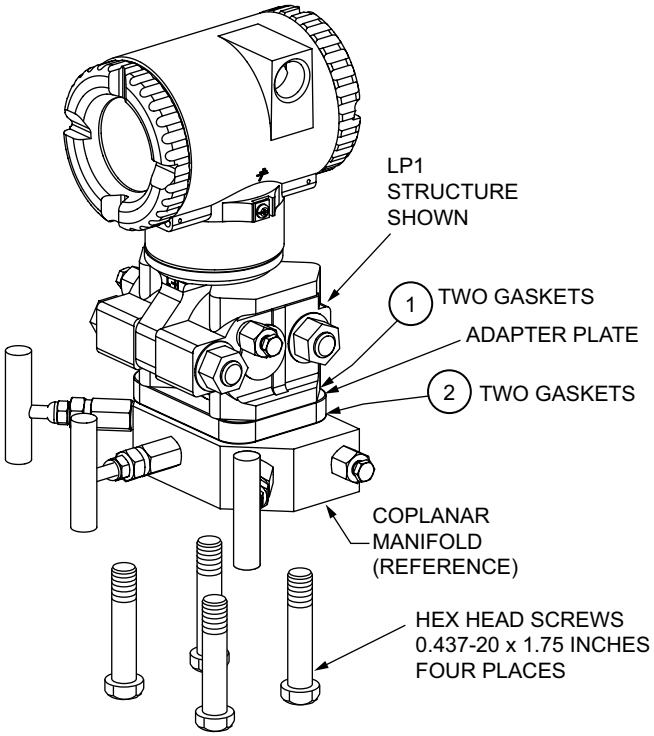

Table 37 - Parts for Adapter Plate Kits -P1 to -P4, Used with “MC” Manifold

Item	Part No.	Qty.	Part Name
n/a	D0170XJ	1	Adapter Plate Kit; B7 Screws; Option -P1
	D0170XM		Adapter Plate Kit; 316 ss Screws; Option -P2
	D0170XN		Adapter Plate Kit; 17-4 ss Screws; Option -P3
	D0170XP		Adapter Plate Kit; B7M Screws; Option -P4

Table 38 - Parts for Adapter Plate Kits -P5 to -P8, Used with “MT3” Manifold

Item	Part No.	Qty.	Part Name
n/a	D0170XQ	1	Adapter Plate Kit; B7 Screws; Option -P5
	D0170XR		Adapter Plate Kit; 316 ss Screws; Option -P6
	D0170XS		Adapter Plate Kit; 17-4 ss Screws; Option -P7
	D0170XT		Adapter Plate Kit; B7M Screws; Option -P8

Table 39 - Gaskets (Included in Kits)

Item	Part No.	Qty.	Part Name
1	D0114RB	2	Gasket, Transmitter to Adapter Plate
2	D0170XK	2	Gasket, Manifold to Adapter Plate

LCD Indicator (Digital Display) Assembly (Option -L1)

Figure 93 - LCD Indicator Assembly (Option -L1)

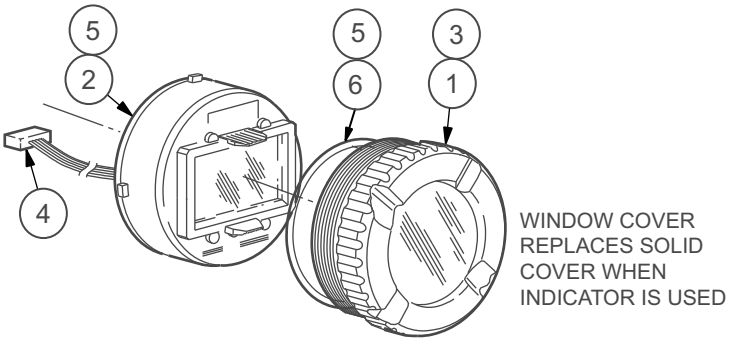

Table 40 - Parts for LCD Indicator Assembly (Option -L1)

Item	Part No.	Qty.	Part Name
1	1 Cover with Window; see *Housing Covers, page 152*		
2	D0162LQ	1	LCD Indicator Module
3	**Below**	1	**Grease, 1.75 oz. Tube**
	X0180JB		Lubit-8 for Transmitters with Aluminum Housing
	X0114AA		Never-Seez for Transmitters with Stainless Steel Housing
4	P0177HB	1	Indicator Cable
5	0048130	1	Grease, Silicone (150 gram tube)
6	**Below**	2	**O-Ring, Cover**
	X0201FC		for Transmitter without -J option
	X0201QP		for Transmitter with -J option

Conduit Connections (Options -A1 and -A3)

Figure 94 - Conduit Connections (Options -A1 and -A3)

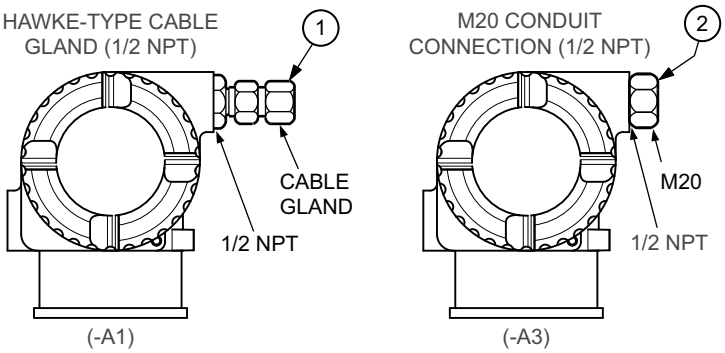

Table 41 - Parts for Conduit Connections (Options -A1 and -A3)

Item	Part No.	Qty.	Part Name
1	N7141HX	1	Hawke-Type 1/2 NPT Brass Cable Gland (Option -A1)
2	N7141DX	1	M20 Connector (Option -A3)

Custody Transfer Lock and Seal (Option -Z2)

Figure 95 - Custody Transfer Lock and Seal (Option -Z2)

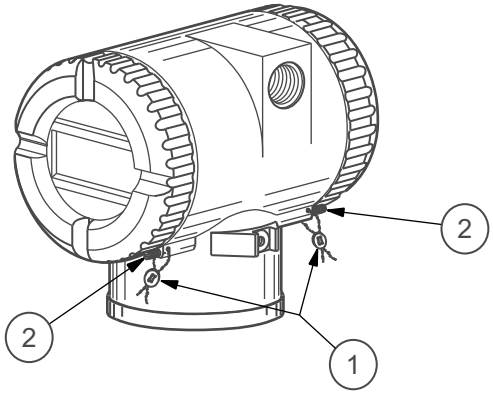

Table 42 - Parts for Custody Transfer Lock and Seal (Option -Z2)

Item	Part No.	Qty.	Part Name
1	S001806	2	Kit with Lock-Out Seal, Wire, and Instructions
2	D0162WM	1	Lock Screw, 0.164-32

Ermeto Connectors (Options -E3 and -E4)

Figure 96 - Ermeto Connectors (Options -E3 and -E4)

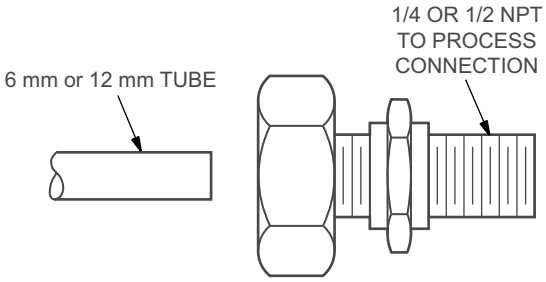

Table 43 - Parts for Ermeto Connectors (Options -E3 and -E4)

Item	Part No.	Qty.	Part Name
n/a	U7002AS	1	Process Connector, 316 ss, 640 bar, 1/4 NPT x 6 mm, Option -E3
	U7002AP		Process Connector, 316 ss, 640 bar, 1/2 NPT x 12 mm, Option -E3

Metric Process Connection (Option -R)

Figure 97 - Metric Process Connection (Option -R)

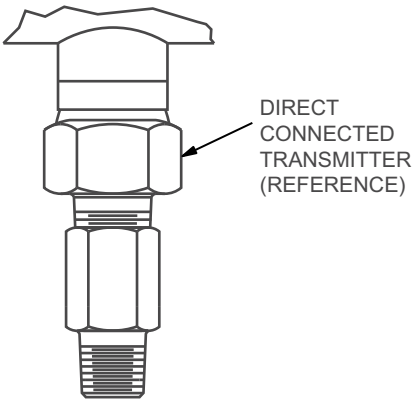

Table 44 - Parts for Metric Process Connection (Option -R)

Item	Part No.	Qty.	Part Name
n/a	X0171ZX	1	Pipe Adapter, 316 ss, 1/2 NPT to Rc 1/2

Recommended Spare Parts

Table 45 - Spare Parts for Direct Connect AP and GP Transmitters

Item No.	Part Number	Part Name	Number of Parts Recommended for		
			1 Inst.	5 Inst.	20 Inst.
See *Direct Connect Transmitters, page 138*					
3	**Below**	**O-Ring, Cover**	0	2	4
	X0201FC	without -J option			
	X0201QP	with -J option			
10	D0197PS	Retention Clip	1	2	4
11	X0179ME	Vent Plug; for Direct Connect GP with sanitary or pulp and paper seals only	1	2	4
12	X0174EX	Button Head Screw	1	2	4
See *LCD Indicator (Digital Display) Assembly (Option -L1), page 159*					
2	D0162LQ	LCD Indicator Module	0	1	1
3	**Below**	**Grease, 1.75 oz. Tube**	1	2	4
	X0180JB	Lubit-8 for Transmitters with Aluminum Housing			
	X0114AA	Never-Seez for Transmitters with Stainless Steel Housing			
5	0048130	Grease, Silicone (150 gram tube)	0	2	4
6	**Below**	**O-Ring, Cover**	0	2	4
	X0201FC	for Transmitter without -J option			
	X0201QP	for Transmitter with -J option			

Table 46 - Spare Parts for Biplanar AP and GP Transmitters

Item No.	Part Number	Part Name	Number of Parts Recommended for		
			1 Inst.	5 Inst.	20 Inst.
See *Biplanar Transmitter Topworks, page 140*					
3	**Below**	**O-Ring, Cover**	0	2	4
	X0201FC	without -J option			
	X0201QP	with -J option			
11	D0197PS	Retention Clip	1	2	4
12	X0174EX	Button Head Screw	1	2	4
See *Biplanar Transmitter Bottomworks for Use with Traditional Structures, page 142*					
4	**Below**	**Vent Screw**	0	2/4[217]	4/8[217]
	B0138MJ	316 ss (standard)			
	B0138MK	Monel			
	D0175PQ	Nickel alloy[218] (to NACE Standard MR0175)			
5	**Below**	**Vent Plug**	0	2/4[217]	4/8[217]
	D0161QT	316 ss (standard)			
	D0161QU	Monel			
	D0175PP	Nickel alloy[218] (to NACE Standard MR0175)			
9	D0114RB	Gasket, PTFE	1	2	4
10	D0161QQ	Glass-filled PTFE (Standard)	1	2	4
See *LCD Indicator (Digital Display) Assembly (Option -L1), page 159*					
2	D0162LQ	LCD Indicator Module	1	2	4
3	**Below**	**Grease, 1.75 oz. Tube**	1	2	4
	X0180JB	Lubit-8 for Transmitters with Aluminum Housing			
	X0114AA	Never-Seez for Transmitters with Stainless Steel Housing			
5	0048130	Grease, Silicone (150 gram tube)	0	2	4
6	**Below**	**O-Ring, Cover**	0	2	4
	X0201FC	for Transmitter without -J option			
	X0201QP	for Transmitter with -J option			

217. The LP2 structure has twice as many vent screws and vent plugs as the LP1 structure. Thus, “2/4” means two for LP1 and four for LP2; “4/8” means four for LP1 and eight for LP2.
218. Equivalent to Hastelloy® C-276. Hastelloy is a registered trademark of Haynes International, Inc.

Table 47 - Spare Parts for DP Transmitters

Item No.	Part Number	Part Name	Number of Parts Recommended for		
			1 Inst.	5 Inst.	20 Inst.
See *DP Transmitter Topworks, page 145*					
3	**Below**	**O-Ring, Cover**	0	2	4
	X0201FC	without -J option			
	X0201QP	with -J option			
12	D0197PS	Retention Clip	1	2	4
13	X0174EX	Screw, Button Head	1	2	4
See *DP Transmitter Bottomworks for Use with Traditional Structures, page 147*					
4	**Below**	**Vent Screw**	0	2	4
	B0138MJ	316 ss (standard)			
	B0138MK	Monel			
	D0175PQ	Nickel alloy[219] (to NACE Standard MR0175)			
5	**Below**	**Vent Plug**	0	2	4
	D0161QT	316 ss (standard)			
	D0161QU	Monel (to NACE standard MR0175)			
	D0175PP	Nickel alloy[219] (to NACE Standard MR0175)			
9	D0114RB	Gasket, PTFE	2	2	4
10	**Below**	**Gasket, Process Cover**	2	4	8
	D0161QQ	Glass-filled PTFE (Standard)			
	X0145MJ	Viton (used with Process Connector Code 7)			
15	D0175TA	Insert, PVDF (used with Process Connector Code 7)	2	4	8
See *DP Transmitter Bottomworks for Use with Low Profile Structures LP1 and LP2, page 150*					
4	**Below**	**Vent Screw**	0	2/4[220]	4/8[220]
	B0138MJ	316 ss			
	D0175PQ	Nickel alloy[219]			
5	**Below**	**Vent Plug**	0	2/4[220]	4/8[220]
	D0161QT	316 ss			
	D0175PP	Nickel alloy[219]			
9	D0114RB	Gasket, PTFE	2	4	8
10	D0161QQ	Gasket, Glass-Filled PTFE	2	4	8

219. Equivalent to Hastelloy® C-276. Hastelloy is a registered trademark of Haynes International, Inc.
220. The LP2 structure has twice as many vent screws and vent plugs as the LP1 structure. Thus, “2/4” means two for LP1 and four for LP2; “4/8” means four for LP1 and eight for LP2.

Table 47 - Spare Parts for DP Transmitters (Continued)

Item No.	Part Number	Part Name	Number of Parts Recommended for		
			1 Inst.	5 Inst.	20 Inst.
See *LCD Indicator (Digital Display) Assembly (Option -L1), page 159*					
2	D0162LQ	LCD Indicator Module	0	1	1
3	**Below**	**Grease, 1.75 oz. Tube**	1	2	4
	X0180JB	Lubit-8 for Transmitters with Aluminum Housing			
	X0114AA	Never-Seez for Transmitters with Stainless Steel Housing			
5	0048130	Grease, Silicone (150 gram tube)	0	2	4
6	**Below**	**O-Ring, Cover**	0	2	4
	X0201FC	for Transmitter without -J option			
	X0201QP	for Transmitter with -J option			
See *Adapter Plates (Options -P1 to -P8) for Direct Mounting to Coplanar Manifolds, page 158*					
1	D0114RB	Gasket - Transmitter to Adapter Plate	2	4	8
2	D0170XK	Gasket - Manifold to Adapter Plate	2	4	8

Appendix A: FOUNDATION Fieldbus Parameters

Parameters that can be viewed or configured from the FOUNDATION Fieldbus host are listed in the following tables. Refer to MI 014-900, *Fieldbus Overview*, for a glossary of parameter terms.

Resource Block Parameters

Table 48 - FOUNDATION Fieldbus Resource Block Parameters

Index	Name	Capability	Factory Default	Comments
1	ST_REV	Read only	0	This parameter reflects the revision level of the static data associated with the function block, and is incremented on each modification of static data.
2	TAG_DESC	Up to 32 characters	blank	User description of the block application.
3	STRATEGY	0 to 65,535	0	Setting this parameter allows you to organize blocks into groups. Enter the same numeric value into the STRATEGY parameter of the blocks you want to group.
4	ALERT_KEY	1 to 255	0	This parameter allows you to set the identification number of the plant unit. This parameter can be reported in alarm messages and allows the host to sort and filter alarms. This value is used in combination with the following parameters when broadcasting alarms: • UPDATE_EVT • BLOCK_ALM • WRITE_ALM • FD_FAIL_ALM • FD_OFFSPEC_ALM • FD_MAINT_ALM • FD_CHECK_ALM
5	MODE_BLK	Auto OOS	Actual: OOS Target: OOS Permitted: Auto, OOS Normal: Auto	This parameter stores the Actual, Target, Permitted, and Normal modes of the block. • Actual mode: The current mode of the block • Target mode: The mode requested by the operator • Permitted modes: All of the modes allowed for this block • Normal mode: The mode of the block during normal operations; can be any single valid Target mode The Resource Block supports the following operating modes: • AUTO (automatic): Execution of the function blocks (MAO, AI, and PID) is permitted • Man (manual) • OOS (out of service): execution of the function blocks (MAO, AI, and PID) is blocked; these blocks cannot be set to AUTO mode

Table 48 - FOUNDATION Fieldbus Resource Block Parameters (Continued)

Index	Name	Capability	Factory Default	Comments
6	BLOCK_ERR	Out-of-Service Power Up Device Needs Maintenance Now Lost NV Data and Lost Static Data Device Fault State Set Simulate Active		This read-only parameter represents the active block errors in the block. This parameter is reported to the host via the BLOCK_ALM parameter. In some cases, BLOCK_ERR_DESC_1 provides more information. • Out-of-Service: If Actual Mode is Out of Service • Power Up: When a reset occurs and the Target Mode is not AUTO • Device Needs Maintenance Now: When there is an error detected in NV and Static memory. A reset will try to restore data from a backup copy, but if that is not successful, the device is set back to defaults. • Lost NV Data and Lost Static Data: When the Target Mode is Out-of-Service since the last hard reset • Device Fault State Set: When FAULT_STATE is true. • Simulate Active: When the simulation jumper is installed; see *Setting the Write Protect Jumper, page 43* and *Setting the Simulate Jumper, page 44*
7	RS_STATE	1. Start/Restart 2. Initialization 3. On-line Linking 4. On-Line 5. Standby 6. Failure	1	This parameter represents the current operating status of the Resource Block: 1. Start/Restart 2. Initialization 3. On-line Linking: the Resource Block's Actual Mode is AUTO but other function blocks have links that are connecting 4. On-Line: Normal operating status; the Resource Block's Actual Mode is AUTO; the configured connections between the function blocks are established 5. Standby: The Resource Block's Actual Mode is Out-of-Service 6. Failure
8	TEST_RW			This is a read/write test parameter and is used only for conformance testing.
9	DD_RESOURCE	Read only; up to 32 characters	32 spaces	This read-only parameter identifies the tag of the resource that contains the Device Description (DD) for this resource. This parameter is not used by these pressure transmitters.
10	MANUFAC_ID	Read only; 0x385884	0x385884	This read-only parameter represents the manufacturer identification number and is used by interface devices to locate the DD file for the resource.
11	DEV_TYPE	Read only; BA40	BA40	This read-only parameter represents the device's model number and is used by interface devices to locate the DD file for the resource.
12	DEV_REV	Read only; 01 hex	01 hex	This read-only parameter represents the revision number of the device and is used by interface devices to locate the DD file for the resource.
13	DD_REV	Read only; 1	1	This read-only parameter represents the revision number of the device description (DD) and is used by interface devices to locate the DD file for the resource. On newer devices, this will always read 1, but the actual DD version can be 1 or higher.

Table 48 - FOUNDATION Fieldbus Resource Block Parameters (Continued)

Index	Name	Capability	Factory Default	Comments
14	GRANT_DENY	Grant/Deny can restrict or allow the following:	Grant: 0 Deny: 0	These options are not used by the device; they are used by control system components to coordinate access to operating, tuning, and alarm parameters by host computers or local control panels. Grant/ Deny can be set to allow or restrict the following operations:
		Program		The ability of an operator to change the Target Mode, Setpoint[221], or Output[222]
		Tune		The ability of an operator or local operator panel to change tuning parameters
		Alarm		The ability of an operator or local operator panel to change the alarm parameters of the block
		Local		The ability of a local operator panel to change the target mode, Setpoint[221], or Output[222]
		Operate		The ability to manipulate the operate parameters for daily plant production
		Service		The ability to perform engineering maintenance work on the device, such as calibration or replacement of sensor or electronics
		Diagnostic		The ability of maintenance or engineering personnel to change or check for device diagnostics
15	HARD_TYPES	Read only: Scalar Input Scalar Output Discrete Input Discrete Output	Scalar Input	This read-only parameter represents the types of hardware available as channel numbers in input and output blocks: • Scalar Input • Scalar Output • Discrete Input • Discrete Output
16	RESTART	Run Defaults Processor Restart Factory Defaults Restart Factory Configuration Restart Factory Instantiation	Run	This parameter initiates a manual restart: • Run: Passive state of the parameter • Defaults: Restarts with default values (only FF bus parameters) • Processor: Restarts processor (same as a power cycle) • Restart Factory Defaults: All device parameters including communications, tag, and address are reset to default values • Restart Factory Configuration: Resets all device parameters to the condition at delivery • Restart Factory Instantiation: Sets all instantiable AI blocks to default values (i.e., 2 instantiable AI blocks back to instantiated)
17	FEATURES	Read only: Reports supported Fault State supported Hard Write Lock supported Change Bypass in Auto Multi-bit Alarm (Bit-Alarm) support Deferral of Inter-Parameter Write Checks		This read-only parameter represents the resource block options supported by the device: • Reports supported: Broadcasts alerts and alarms (versus polled alerts and alarms) • Fault State supported: FAULT_STATE is supported in output blocks • Hard Write Lock supported: Supports hardware write locks • Change of Bypass in Auto: Bypass is allowed in both automatic and manual modes • Multi-bit Alarm (Bit-Alarm) support: Alarms are sent for each bit in BLOCK_ERR • Deferral of Inter-Parameter Write Checks: While a block is out-of-service, inter-parameter write checks are not performed. On the transition from out-of-service, all parameters are checked. The corresponding FEATURE_SEL parameter allows you to choose among the options supported in this parameter.

221. Setpoints can be changed only if the block mode is Man or Auto.
222. Outputs can be changed only if the block mode is Man.

Table 48 - FOUNDATION Fieldbus Resource Block Parameters (Continued)

Index	Name	Capability	Factory Default	Comments
18	FEATURE_SEL	Reports supported Fault State supported Hard Write Lock supported Change Bypass in Auto Multi-bit Alarm (Bit-Alarm) support Deferral of Inter-Parameter Write Checks	Fault State supported Hard Write Lock supported	This parameter allows you to select or deselect supported Resource Block options defined in the FEATURES parameter.
19	CYCLE_TYPE	Read only: Scheduled Completion of block execution Manufacturer specific	Scheduled; Completion of block execution	This read-only parameter displays the block execution methods supported by the resource: • Scheduled: Timed block execution method • Completion of block execution: Sequential block execution method • Manufacturer specific: Manufacturer specified (similar to a Transducer block) The corresponding CYCLE_SEL parameter allows you to choose among the options supported in this parameter.
20	CYCLE_SEL	Scheduled Block Execution Manuf Specific	Scheduled	This parameter allows you to select or deselect block execution options defined in the CYCLE_TYPE parameter used by the fieldbus host system.
21	MIN_CYCLE_T	Read only	200 ms	This read-only parameter stores the shortest cycle interval of which the resource is capable. This parameter is displayed in 1/32 of a millisecond.
22	MEMORY_SIZE	Read only	256	This read-only parameter stores the available configuration memory for configuring Function Blocks, in kilobytes. The FREE_SPACE parameter shows the percentage of configuration memory that is still available. Check this parameter before instantiating a block.
23	NV_CYCLE_T	Read only	15 seconds	This parameter shows the interval between writing copies of non-volatile parameters to non-volatile memory in units of 1/32 of a millisecond. A setting of zero indicates that the parameters are written immediately when they are changed. At the end of NV_CYCLE_T, only those parameters that have changed will be updated in non-volatile memory.
24	FREE_SPACE	Read only; 0 to 100%	0%	This read-only parameter reflects the percentage of free system memory available for further block instantiation. Zero is a preconfigured resource. As each of the three AI blocks is deinstantiated, this parameter increases by 33.33%. When all AI blocks are deinstantiated, the value is approximately 100%.
25	FREE_TIME	Read only; 0 to 100%	0%	This read-only parameter reflects the percentage of time available to process additional instantiable blocks.
26	SHED_RCAS	Used by PID block only	640000	Specifies the timeout in units of 1/32 of a millisecond for write attempts to function blocks' RCAS_IN parameters. When the monitoring time elapses, the function block changes from the RCas operating mode to the operating mode selected in the SHED_OPT parameter.
27	SHED_ROUT	Used by PID block only	640000	This parameter allows you to specify the timeout in units of 1/32 of a millisecond for write attempts to PID blocks in the ROut operating mode. When the monitoring time elapses, the PID block changes from the ROut operating mode to the operating mode selected in the SHED_OPT parameter.

Table 48 - FOUNDATION Fieldbus Resource Block Parameters (Continued)

Index	Name	Capability	Factory Default	Comments
28	FAULT_STATE	Read only: 1. Clear 2. Active	1	This read-only parameter represents the current status of the condition set by loss of communication to or the propagation of a loss of communication to an output block's CAS_IN, CAS_IN_D, IN_*, RCAS_IN, or RCAS_IN_D parameter while in the corresponding mode. This parameter indicates the Fault State condition is being simulated by the Resource block via the SET_FSTATE parameter. This parameter is cleared by the CLR_FSTATE parameter. When the Fault State condition exists, output function blocks perform their FSTATE actions if the "Fault State supported" bit is set in the FEATURE_SEL parameter.
29	SET_FSTATE	1: Off 2: Set	Off	Sets a faultstate condition by setting the FAULT_STATE parameter to Active. Manually setting a faultstate condition is only supported if the "Fault State supported" bit is set in the FEATURE_SEL parameter.
30	CLR_FSTATE	1: Off 2: Clear	Off	This parameter clears the FAULT_STATE parameter.
31	MAX_NOTIFY	Read only	20	This read-only parameter represents the maximum number of unconfirmed alert reports possible. To control alert flooding, adjust the LIM_NOTIFY parameter.
32	LIM_NOTIFY	0 to 20	20	This read-only parameter represents the maximum number of unconfirmed alert notify messages that can exist at the same time. If set to zero, no alerts are reported.
33	CONFIRM_TIME	Up to 37 days	640000	This parameter allows you to specify the amount of time the resource will wait, in units of 1/32 of a millisecond, for the confirmation of receipt of an event report. If the transmitter does not receive confirmation within this time, the event report is sent to the fieldbus host system again. If CONFIRM_TIME is 0, the resource will not retry sending the event report.
34	WRITE_LOCK	Read only: Unlocked Locked	Hardware Write Locked	This read-only parameter indicates whether or not device data can be modified: 1: Unlocked: Device data can be modified 2: Locked: Device data cannot be modified If FEATURE_SEL bit 4 (Hardware Write Lock) is clear, the external jumper is ignored, no matter if it is in the Unlocked or Locked position. On the other hand, if FEATURE_SEL bit 4 is set, WRITE_LOCK is set to Locked, indicating that the external jumper is set to the locked position and the WRITE_LOCK parameter cannot be changed. Clearing WRITE_LOCK generates a WRITE_ALM alert at the WRITE_PRI priority. Setting WRITE_LOCK clears the alert if it exists.
35	UPDATE_EVT	System Parameter:		This parameter provides an alert generated by any change to the block's static data. Only Unacknowledged is writable.
		Unacknowledged		Unacknowledged: Set to Unacknowledged on a new alert; set to Acknowledged to indicate that the alert has been noticed: 1. Acknowledged 2. Unacknowledged
		Update State		Update State: Gives an indication that the host has received an alert; automatically set to Update reported when not configured to communicate to the host: 1. Update reported 2. Update not reported
		Time Stamp		Time Stamp: Time when the parameter was updated
		Static Revision		Static Revision: ST_REV after parameter was updated or transitioned from OOS when parameters were changed
		Relative Index		Relative Index: Relative index of the parameter that was updated, or 0 if more than one parameter changed

Table 48 - FOUNDATION Fieldbus Resource Block Parameters (Continued)

Index	Name	Capability	Factory Default	Comments
36	BLOCK_ALM	System Parameter:		This parameter provides an alert that is generated by any error in BLOCK_ERR:
		Unacknowledged		Unacknowledged: Set to Unacknowledged on a new alert; set to Acknowledged to indicate that the alert has been noticed: 1. Acknowledged 2. Unacknowledged
		Alarm State		Alarm State: Gives indication that the host has received an alert; automatically set to Active reported when not configured to communicate to host: 1. Clear reported 2. Clear not reported 3. Active reported 4. Active not reported
		Time Stamp		Time Stamp: Time when the alert was generated
		Subcode		Subcode: Cause of the alert (bit number of error in BLOCK_ERR if FEATURE_SEL•MultiBit is 0, or value of BLOCK_ERR if FEATURE_SEL•MultiBit is 1)
		Value		Value: The value of the associated parameter (always 0 if FEATURE_SEL•MultiBit is 0, or bit number of error in BLOCK_ERR if FEATURE_SEL•MultiBit is 1)
37	ALARM_SUM	Current Alarms Unacknowledged Unreported Disabled	All alarms disabled	This parameter stores a summary of alarms associated with the block: • Current Alarms: The active status of each alarm • Unacknowledged: Unacknowledged state of each alarm • Unreported: Unreported status of each alarm • Disabled: Use this parameter to disable or enable each alarm; only Disabled is writable Types of alarms in the Resource block include: • Write alarm • Block alarm • Fail alarm • Offspec alarm • Maint alarm • Check alarm
38	ACK_OPTION	0 or 1	All disabled	This parameter allows you to automatically acknowledge alarms associated with the block: 0. Auto Ack Disabled 1. Auto Ack Enabled
39	WRITE_PRI	0 to 15	0	This parameter allows you to set the priority of the alarm generated by setting WRITE_LOCK to Clear: • 0: If Active, the alarm will clear • 1: Alarm occurs and clears, but is not reported to the fieldbus host system • 2: Reserved for block alarms and alarms that do not require attention • 3-7: Advisory alarms (3=lowest priority advisory alarm, 7=highest priority advisory alarm) are sent to the fieldbus host system • 8-15: Critical alarms (8=lowest priority critical alarm, 15=highest priority critical alarm) are sent to the fieldbus host system

Table 48 - FOUNDATION Fieldbus Resource Block Parameters (Continued)

Index	Name	Capability	Factory Default	Comments
40	WRITE_ALM	Unacknowledged Alarm State Time Stamp Subcode Value		This parameter stores information about the alert generated by setting WRITE_LOCK to Clear: • Unacknowledged: Indicates whether or not the alert has been noticed: 1. Acknowledged 2. Unacknowledged • Alarm State: Indicates that the host has received the alert; automatically set to Active reported when not configured to communicate to host: 1. Clear reported 2. Clear not reported 3. Active reported 4. Active not reported • Time Stamp: Time when the alert was generated • Subcode: Cause of the alert • Value: The value of WRITE_LOCK
41	ITK_VER	Read only	6	This read-only parameter represents the major revision number of the interoperability test suite used in certifying this device's interoperability.
42	FD_VER	Read only		This read-only parameter represents the major version number of the FF-912 Field Diagnostics Specification.
43	FD_FAIL_ ACTIVE	Read only		These parameters represent active Field Diagnostic Conditions that are mapped by their corresponding *_MAP parameters.
44	FD_OFFSPEC_ ACTIVE			
45	FD_MAINT_ ACTIVE			
46	FD_CHECK_ ACTIVE			
47	FD_FAIL_MAP	Read only		These parameters map the Field Diagnostic Conditions that are detected to one or more categories: Fail, Offspec, Maint, and Check.
48	FD_OFFSPEC_ MAP			
49	FD_MAINT_MAP			
50	FD_CHECK_ MAP			
51	FD_FAIL_MASK		0	These parameters allow you to suppress Field Diagnostic Conditions from being broadcast to a host. Setting the bit inhibits the broadcast of a condition, and clearing the bit allows the broadcast of a condition. The following conditions can be masked: • Bit 31: Sensor Board Bad Status Alarm (**XmtrBad** may appear on the optional local display when this condition is true) • Bit 30: Sensor Board Comm Alert Alarm • Bit 24: Temperature High Alarm • Bit 23: Temperature Low Alarm • Bit 0: Check Condition
52	FD_OFFSPEC_ MASK			
53	FD_MAINT_ MASK			
54	FD_CHECK_ MASK			

Table 48 - FOUNDATION Fieldbus Resource Block Parameters (Continued)

Index	Name	Capability	Factory Default	Comments
55	FD_FAIL_ALM	Read only: Unacknowledged Alarm State Time Stamp Subcode Value		These parameters represent Field Diagnostic Conditions that are active, not masked, and are broadcast to a host: • Unacknowledged: Set to Unacknowledged on a new alert; set to Acknowledged to indicate that the alert has been noticed: 1. Acknowledged 2. Unacknowledged • Alarm State: Gives indication that the host has received an alert; automatically set to Active reported when not configured to communicate to host: 1. Clear reported 2. Clear not reported 3. Active reported 4. Active not reported • Time Stamp: Time when the alert was generated • Subcode: Value of *_ACTIVE masked with *_MASK • Value: Bit number from *_ACTIVE being reported
56	FD_OFFSPEC_ ALM			
57	FD_MAINT_ALM			
58	FD_CHECK_ ALM			
59	FD_FAIL_PRI	0 to 15	0	These parameters allow you to set the priority of Field Diagnostic Conditions that are broadcast to a host: • 0: If Active, the alarm will clear • 1: Alarm occurs and clears, but is not reported to the fieldbus host system • 2: Reserved for block alarms and alarms that do not require attention • 3-7: Advisory alarms (3=lowest priority advisory alarm, 7=highest priority advisory alarm) are sent to the fieldbus host system • 8-15: Critical alarms (8=lowest priority critical alarm, 15=highest priority critical alarm) are sent to the fieldbus host system
60	FD_OFFSPEC_ PRI			
61	FD_MAINT_PRI			
62	FD_CHECK_PRI			
63	FD_SIMULATE	Diagnostic Simulate Value Diagnostic Value Enable	Disabled; No conditions detected	Allows you to observe or simulate Field Diagnostic Conditions and test the functionality of the rest of the FD parameters: • Diagnostic Simulate Value: Set these bits to be used in place of the actual bits detected in Diagnostic Value • Diagnostic Value: Read Only subparameter; bits represent actual active conditions present • Enable: Set this subparameter to Enable to use Diagnostic Simulate Value if the Simulate jumper is present. Otherwise 1 allows Diagnostic Value to be mapped to active parameters via the *_MAP parameters
64	FD_ RECOMMEN_ ACT	Read only: 0, 1, 2, 4, 8, 16	0	This parameter indicates a recommended course of action based on the condition(s) detected: • 0: No Action Required • 1: Replace Electronics Module • 2: Replace Electronics Module • 4: Device at too High of Temperature • 8: Device at too Low of Temperature • 16: Transducer Block not in Expected Mode
65	SOFTWARE_ REV	Read only	MAU FXX.YY.ZZ SI FXX.YYY.ZZZ	This parameter reflects the software versions of the electronic circuit boards.
66	HARDWARE_ REV	Read only	MAU FXX.YY SI FXX.YY	This parameter reflects the hardware versions of the electronic circuit boards.
67	CAPABILITY_ LEV	Read only	1	This parameter reflects the current active capability level defined in the CFF file; only 1 is supported.

Table 48 - FOUNDATION Fieldbus Resource Block Parameters (Continued)

Index	Name	Capability	Factory Default	Comments
68	COMPATIBILITY_REV	Read only	01 hex	This parameter reflects the lowest previous device revision with which this device revision is upwardly compatible.
71	BLOCK_ERR_DESC_1	Read only: Power Up Lost NV Data Lost Static Data Fault State Set Simulate Active	0	This parameter reports more specific details regarding persistent errors that are reported through BLOCK_ERR. The following errors are supported: • Power Up: Device Powered Up since Mode was Auto; setting the Mode to Auto clears this error • Lost NV Data/Lost Static Data: All static and nonvolatile parameters are reset and the device needs a complete download • Fault State Set: Fault State Enabled in Resource Block; use Clear_FState to clear; all control and output blocks are affected • Simulate Active: Simulation Jumper is connected to the device; all input and output blocks can be enabled for simulation

Transducer Block Parameters

Table 49 - FOUNDATION Fieldbus Transducer Block Parameters

Index	Name	Capability	Factory Default	Comments
1	ST_REV	Read only	0	This parameter reflects the revision level of the static data associated with the function block, and is incremented on each modification of static data.
2	TAG_DESC	Up to 32 characters	blank	User description of the block application.
3	STRATEGY	0 to 65,535	0	Setting this parameter allows you to organize blocks into groups. Enter the same numeric value into the STRATEGY parameter of the blocks you want to group.
4	ALERT_KEY	1 to 255	0	This parameter allows you to set the identification number of the plant unit. This parameter can be reported in alarm messages and allows the host to sort and filter alarms. This value is used in combination with the UPDATE_EVT and BLOCK_ALM parameters when broadcasting alarms.
5	MODE_BLK	Auto Man OOS LO	Target: Auto Permitted: Auto, Man, OOS Normal: Auto Actual: Auto	This parameter stores the Actual, Target, Permitted, and Normal modes of the block, and supports the following operating modes: • Actual mode: The current mode of the block, and will be LO if the Target mode is AUTO and the LCD is being used to configure the instrument. • Target mode: The mode requested by the operator. • Permitted modes: All of the modes allowed for this block. • Normal mode: The mode of the block during normal operations; can be any single valid Target mode.
6	BLOCK_ERR	Out-of-Service Input Failure Local Override Configuration Error Other	0	This read-only parameter represents the active block errors in the block. This parameter is reported to the host via the BLOCK_ALM parameter. In some cases, BLOCK_ERR_DESC_1 provides more information. • Out-of-Service: This block error occurs if the Actual mode is Out-of-Service. • Input Failure Detected by this block/process variable has a status of BAD, Sensor Failure: This block error occurs if the sensor is communicating but has a Bad status. • Local Override: This block error occurs if the LCD is being used for configuration changes. • Configuration Error: This block error occurs if Primary Value Range is not correct . • Other: This block error occurs if the sensor is not communicating and XD_ERROR has a value of 22.

Table 49 - FOUNDATION Fieldbus Transducer Block Parameters (Continued)

Index	Name	Capability	Factory Default	Comments
7	UPDATE_EVT	Unacknowledged Update State Time Stamp Static Revision Relative Index		This system parameter provides an alert generated by any change to the block's static data. Only Unacknowledged is writable. • Unacknowledged: Set to Unacknowledged on a new alert; set to Acknowledged to indicate that the alert has been noticed. 1. Acknowledged 2. Unacknowledged • Update State: Gives an indication that the host has received an alert; automatically set to Update reported when not configured to communicate to the host. 1. Update reported 2. Update not reported • Time Stamp: Time when the parameter was updated. • Static Revision: ST_REV after the parameter was updated or transitioned from OOS when parameters were changed. • Relative Index: Relative index of the parameter that was updated, or 0 if more than one parameter changed.
8	BLOCK_ALM	Unacknowledged Alarm State Time Stamp Subcode Value		This system parameter provides an alert that is generated by any error in BLOCK_ERR: • Unacknowledged: Set to Unacknowledged on a new alert; set to Acknowledged to indicate that the alert has been noticed. 1. Acknowledged 2. Unacknowledged • Alarm State: Gives an indication that the host has received an alert; automatically set to Active reported when not configured to communicate to the host. 1. Clear reported 2. Clear not reported 3. Active reported 4. Active not reported • Time Stamp: Time when the alert was generated. • Subcode: Cause of the alert (bit number of error in BLOCK_ERR if FEATURE_SEL•MultiBit is 0, or value of BLOCK_ERR if FEATURE_SEL•MultiBit is 1). • Value: The value of the associated parameter (always 0 if FEATURE_SEL•MultiBit is 0, or bit number of error in BLOCK_ERR if FEATURE_SEL•MultiBit is 1).
9	TRANSDUCER_DIRECTORY	Read only	0	This parameter specifies the number and starting indexes of the transducers in the Transducer block. This parameter is not used by these pressure transmitters.
10	TRANSDUCER_TYPE	Read only	Standard Pressure with Calibration	This parameter identifies the Transducer block.
11	TRANSDUCER_TYPE_VER	Read only	0x0201	Read only parameter that identifies the Transducer block version in the format 0xAABB, where AA is the major revision of the transducer specification on which the transducer is based, and BB is the manufacturer revision.
12	XD_ERROR	Read only: 0: No Error 22: I/O Failure	0	This parameter reflects the Transducer error code used in conjunction with the "Other" BLOCK_ERR bit set. I/O failures are caused by a communication failure between the fieldbus board and the sensor board.
13	COLLECTION_DIRECTORY	Read only	0	This parameter specifies the number and starting indexes of the collections in the transducer directory.

Table 49 - FOUNDATION Fieldbus Transducer Block Parameters (Continued)

Index	Name	Capability	Factory Default	Comments
14	PRIMARY_ VALUE_TYPE	Read only: 107: Differential Pressure 108: Gauge Pressure 109: Absolute Pressure	Depending on the transmitter type: 107: Differential Pressure 108: Gauge Pressure 109: Absolute Pressure	This parameter defines the type of measurement represented in PRIMARY_VALUE.
15	PRIMARY_ VALUE	Read only		The measured value and status available to Analog Input Function Blocks as CHANNEL 1 (Pressure).
16	PRIMARY_ VALUE_RANGE	EU_0 EU_100 UNITS_INDEX DECIMAL		This parameter reflects the range, units, and precision of the primary value: • EU_0: Engineering units at 0% of range (low calibration limit) • EU_100: Engineering units at 100% of range (high calibration limit) • UNITS_INDEX: Units of the primary value • DECIMAL: Number of digits to the right of the decimal point EU_0 and EU_100 are limited to ±10% over the SENSOR_RANGE, and also by CAL_MIN_SPAN and CAL_MAX_SPAN.
17	CAL_POINT_HI	Read only, except in Auto and Manual modes		This parameter reflects the highest calibrated value. This is the value from the pressure reference used during calibration, and should be as close as possible to the value in PRIMARY_VALUE_RANGE•EU_100. See *Calibration, page 85* for more information.
18	CAL_POINT_LO	Read only, except in Auto and Manual modes		This parameter reflects the lowest calibrated value. This is the value from the pressure reference used during calibration, and should be as close as possible to the value in PRIMARY_VALUE_RANGE•EU_0. See *Calibration, page 85* for more information.
19	CAL_MIN_SPAN	Read only	10	This parameter reflects the minimum calibration span value allowed, and is expressed in PRIMARY_VALUE_RANGE units. See *Calibration, page 85* for more information.
20	CAL_VALUE	Read only		This parameter reflects the PRIMARY_VALUE expressed in PRIMARY_VALUE_UNITS. See *Calibration, page 85* for more information.
21	CAL_UNIT	Read only, except in OOS and Manual modes		This parameter reflects the engineering units used during the calibration of CAL_POINT_HI or CAL_POINT_LO. See *Calibration, page 85* for more information.
22	XD_OPTS	Read only, except in OOS mode	BAD in Manual Mode	This parameter allows you to alter transducer behavior: 0: Connected Channel Status BAD in MAN 1: Connected Channel Status UNC in MAN
23	SENSOR_TYPE	Read only	124 (Strain Gauge)	This parameter reflects the type of sensor.
24	SENSOR_ RANGE	EU_0 EU_100 UNITS_INDEX DECIMAL	EU_100 and EU_ 0 are set per sales order; units are set to 1141 (psi), and resolution is set to 5 places after the decimal	This parameter allows you to configure the high and low range limit values, the engineering units, and the number of digits to the right of the decimal point for the sensor: • EU_100: Upper sensor range limit • EU_0: Lower sensor range limit • UNITS_INDEX: Units of the SENSOR_VALUE • DECIMAL: Number of places after the decimal point for the SENSOR_VALUE
25	SENSOR_SN			This parameter reflects the serial number of the sensor.

Table 49 - FOUNDATION Fieldbus Transducer Block Parameters (Continued)

Index	Name	Capability	Factory Default	Comments
26	SENSOR_CAL_ METHOD	Factory trim standard calibration User trim standard calibration	Factory trim standard	This parameter reflects the method that was used for the last sensor calibration: • Factory trim standard calibration: Sensor linearization with the factory calibration values. • User trim standard calibration: Sensor linearization with the values CAL_POINT_HI and CAL_POINT_LO.
27	SENSOR_CAL_ LOC		blank	This parameter stores the location where the sensor calibration was last performed.
28	SENSOR_CAL_ DATE		n/a	This parameter stores the date and time of the last calibration. **NOTE:** If you calibrate the sensor using the LCD, hours, minutes, seconds, and day of the week will all be set to zero.
29	SENSOR_CAL_ WHO		blank	This parameter stores the name of the person who performed the last calibration.
30	SENSOR_ ISOLATOR_MTL	Read only	0	This parameter defines the construction material of the isolating diaphragms. This parameter is not used by these pressure transmitters.
31	SENSOR_FILL_ FLUID	Read only	0	This parameter defines the type of fill fluid used in the sensor. This parameter is not used by these pressure transmitters.
32	SECONDARY_ VALUE	Read only		The measured value and status available to Analog Input Function Blocks as CHANNEL 2 (Sensor Temperature).
33	SECONDARY_ VALUE_RANGE	Read only except in OOS mode: EU_100 EU_0 UNITS_INDEX DECIMAL	EU_100 is set to 121, EU_0 is set to -46, units are set to 1001 (°C), and resolution is set to 5 places after the decimal	This parameter allows you to configure the following for the secondary value (Channel 2, Sensor Temperature): • EU_100: Sensor temperature upper range limit • EU_0: Sensor temperature lower range limit • UNITS_INDEX: Units of the secondary value • DECIMAL: Places after the decimal point for the SECONDARY_ VALUE
34	THIRD_VALUE_ TYPE	Read only except in OOS Mode: 1. Pressure Linear 2. Square Root < 1% 3. Square Root < 4% 4. Square Root 0-20%	Pressure Linear	This parameter allows you to select the type of measurement represented in THIRD_VALUE: • 1. Pressure Linear: This is always selected for AP and GP transmitters. • 2. Square Root < 1%: square root flow calculation with cutoff below 1% of calibrated differential pressure range. (DP transmitters only.) • 3. Square Root < 4%: square root flow calculation with linear extrapolation below 4% of calibrated differential pressure range. (DP transmitters only.) • 4. Square Root 0-20%: square root flow calculation with a user-configured cutoff specified between 0 and 20% of the flow upper range value. (DP transmitters only.) The actual cutoff for this option is set in THIRD_VALUE_FLOW_CUTOFF.
35	THIRD_VALUE	Read only		The measured value and status available to Analog Input Function Blocks as CHANNEL 3 (Pressure or Flow).
36	THIRD_VALUE_ RANGE	Only UNITS_ INDEX and DECIMAL are writable in OOS mode: EU_100 EU_0 UNITS_INDEX DECIMAL	Units are set to 1141 (psi) or 1148 (inH2O), and resolution is set to 5 places after the decimal	This parameter allows you to configure the following for the third value: • EU_100: Upper limit defined by PRIMARY_VALUE_RANGE • EU_0: Lower limit defined by PRIMARY_VALUE_RANGE • UNITS_INDEX: Units for the third value • DECIMAL: Places after the decimal point for the third value Notes for DP transmitters only: • When the THIRD_VALUE_TYPE is Pressure Linear, select pressure units for UNITS_INDEX. • When the THIRD_VALUE_TYPE is a square root option, select flow units for UNITS_INDEX and set the THIRD_VALUE_FLOW_ MAX to set the value of EU_100.

Table 49 - FOUNDATION Fieldbus Transducer Block Parameters (Continued)

Index	Name	Capability	Factory Default	Comments
37	THIRD_VALUE_ FLOW_MAX	Read only except in OOS mode		For DP transmitters only, when THIRD_VALUE_TYPE is set to one of the square root options, this parameter calibrates the measurement in THIRD_VALUE for the maximum flow rate when the configured DP pressure measurement is at its maximum configured in PRIMARY_ VALUE_RANGE.
38	THIRD_VALUE_ FLOW_CUTOFF	Read only except in OOS mode % units, limited from 0.0 to 20.0	0.0	For DP transmitters only, this parameter allows you to select the configurable cutoff when THIRD_VALUE_TYPE is set to Square Root 0-20%.
39	FOURTH_ VALUE_TYPE	Read only Electronics Temperature	Electronics Temperature	This parameter is the type of measurement represented in FOURTH_ VALUE (Electronics Temperature).
40	FOURTH_ VALUE	Read only, in FOURTH_ VALUE_RANGE units		This parameter reflects the measured value and status available to Analog Input Function Blocks as Channel 4 (Electronics Temperature).
41	FOURTH_ VALUE_RANGE	Only DECIMAL is writable in OOS mode: EU_100 EU_0 UNITS_INDEX DECIMAL	EU_100 is set to +85, EU_0 is set to -40, units are set to 1001 (°C), and resolution is set to 5 places after the decimal	This parameter allows you to configure the following for the fourth value: • EU_100: Upper temperature limit for electronics • EU_0: Lower temperature limit for electronics • UNITS_INDEX: Units of the fourth value • DECIMAL: Places after the decimal point for the fourth value
42	PRIMARY_ VALUE_OFFSET	Read only except in OOS mode, in PRIMARY_ VALUE_RANGE units		This parameter stores the value added to the PRIMARY_VALUE. • If the offset of the measured value is greater than 110% of PRIMARY_VALUE_RANGE, then PRIMARY_VALUE will have a limit status set. • A positive offset results in a negative value being added to PRIMARY_VALUE, and a negative offset results in a positive value being added to PRIMARY_VALUE.
43	THIRD_VALUE_ OFFSET	Read only except in OOS mode, in THIRD_VALUE_ RANGE units		This parameter reflects the value added to the measured value of THIRD_VALUE. • If the offset of the measured value is greater than 110% of THIRD_VALUE_RANGE, then THIRD_VALUE will have a limit status set. • A positive offset results in a negative value being added to THIRD_VALUE, and a negative offset results in a positive value being added to THIRD_VALUE.
44	FOXCAL_ CONTROL	0. Off 1. On		This parameter allows you to enable and disable the FoxCal™ feature that precalibrates the sensor at multiple ranges. • When FoxCal™ is enabled (On), CAL_POINT_HI and CAL_ POINT_LO are not used. • When FoxCal™ is disabled (Off), the last calibration of CAL_ POINT_HI and CAL_POINT_LO may not match the current configuration of PRIMARY_VALUE_RANGE. For optimal performance, avoid large mismatches.

Table 49 - FOUNDATION Fieldbus Transducer Block Parameters (Continued)

Index	Name	Capability	Factory Default	Comments
45	SENSOR_ DAMPING	Read only except in OOS mode	0.25	This parameter allows you to set the Pressure Damping Factor: 1 = 0.25 seconds Sensor Damping 2 = 0.50 seconds Sensor Damping 3 = 1.00 seconds Sensor Damping 4 = 2.00 seconds Sensor Damping 5 = 4.00 seconds Sensor Damping 6 = 8.00 seconds Sensor Damping 7 = 16.0 seconds Sensor Damping 8 = 32.0 seconds Sensor Damping
46	CAL_AT_ZERO	Read only except in Auto or Man Modes	0	This parameter allows you to calibrate the zero of the transmitter and to enable or disable the optional external zero button: 0 = External Zero Button Disabled (read or write) 1 = External Zero Button Enabled (read or write) 55 = Zero Primary Value Immediately (write only) Be sure to read the PRIMARY_VALUE_RANGE before writing the Zero Primary Value command.
47	CAL_MAX_ SPAN	Read only		This parameter reflects the maximum calibration span value allowed. This maximum span information is necessary to help ensure that when calibration is performed, the high and low calibrated points do not exceed the maximum allowed span, which is less than the sensor range in some instances.
48	USER_DAYS	Read only except to reset to 0, up to 136 years	0	This parameter reflects the number of days the transmitter has been running since the last reset of USER_DAYS. To reset to zero, write a 0 to this parameter.
49	TOTAL_DAYS	Read only, up to 136 years	0	This parameter reflects the number of days the transmitter has been running since manufacture.
50	FACTORY_ STATUS	Read only	0	This parameter stores raw status parameters used by Manufacturing.

Table 49 - FOUNDATION Fieldbus Transducer Block Parameters (Continued)

Index	Name	Capability	Factory Default	Comments
53	PV_DISPLAY_SETUP_A	1. PV_SOURCE 2. PV_LABEL 3. PV_UNITS 4. PV_DECIMAL Read only: 5. PV_STATUS 6. PV_VALUE	0, "A", "DISABL", 0, "DISABL", 0	This parameter allows you to configure the Transducer block's PV outputs' source, units string, label string, and number of decimal places. • 1. PV_SOURCE: 0=Disabled 1=IN_1 (input to the Display block) 2=IN_2 (input to the Display block) 3=IN_3 (input to the Display block) 4=IN_4 (input to the Display block) 5=IN_5 (input to the Display block) 6=IN_6 (input to the Display block) 7=IN_7 (input to the Display block) 8=IN_8 (input to the Display block) 9=AI1_OUT 10=AI2_OUT 11=AI3_OUT 12=PID_OUT • 2. PV_LABEL: Read-only label, fixed with a value of "A", "B", "C", or "D", appears with the units on the alphanumeric line of the display • 3. PV_UNITS: Units string limited to the characters A to Z, a to z, the space character, and the digits 0 to 9 • 4. PV_DECIMAL: Limited from 0 to 3, this subparameter allows you to format the display of PV_VALUE • 5. PV_STATUS: Status strings are set to the following:[223] UNINST: If the block is not instantiated BAD OS: When a block associated with the PV is Out of Service BAD NC: When the input on the display block is not connected to anything BAD: All other Bad status GOODCS: Good Cascade GOODNC: Good Non Cascade UNC: All Uncertain statuses • 6. PV_VALUE: Value displayed on LCD
54	PV_DISPLAY_SETUP_B		0, "B", "DISABL", 0, "DISABL", 0	
55	PV_DISPLAY_SETUP_C		0, "C", "DISABL", 0, "DISABL", 0	
56	PV_DISPLAY_SETUP_D		0, "D", "DISABL", 0, "DISABL", 0	
57	BLOCK_ERR_DESC_1	Read only: Other with XD_ERROR 22 Local Override Input Failure Block Configuration	0	This parameter reports more specific details regarding persistent errors that are reported through BLOCK_ERR. The following errors are supported: • Other with XD_ERROR 22: Sensor Board Comm timeout (no communication from the sensor for over 4 seconds) • Local Override: Sensor Configuration Active (local display is being used for configuration changes) • Input Failure: Sensor Board indicates Bad Status: Sensor board is communicating, but has a Bad status • Block Configuration: PRIMARY_VALUE_RANGE•EU_100 less than or equal to PRIMARY_VALUE_RANGE•EU_0 (EU_100 must be greater than EU_0 plus CAL_MIN_SPAN)

223. If PV_STATUS is not GOODCS or GOODNC, the LCD displays the PV_STATUS instead of PV_UNITS.

Display (MAO) Block Parameters

Table 50 - FOUNDATION Fieldbus Display (MAO) Block Parameters

Index	Name	Factory Default	Comments
1	ST_REV	These parameters are not used with these pressure transmitters.	
2	TAG_DESC		
3	STRATEGY		
4	ALERT_KEY		
5	MODE_BLK		
6	BLOCK_ERR		
7	CHANNEL		
8	IN_1	BAD, Not Connected, Constant, 0	Each of these parameters is an analog input value and status that represents a measured or calculated value. The value and status are always supplied to the Transducer block, and the value is used for the output, provided that the block is not in FAULT_STATE and MO_OPTS is not “Fault state to value.”
9	IN_2		
10	IN_3		
11	IN_4		
12	IN_5		
13	IN_6		
14	IN_7		
15	IN_8		
16	MO_OPTS	These parameters are not used with these pressure transmitters.	
17	FSTATE_TIME		
18	FSTATE_VAL1		
19	FSTATE_VAL2		
20	FSTATE_VAL3		
21	FSTATE_VAL4		
22	FSTATE_VAL5		
23	FSTATE_VAL6		
24	FSTATE_VAL7		
25	FSTATE_VAL8		
26	FSTATE_ STATUS		
27	UPDATE_EVT		
28	BLOCK_ALM		
29	BLOCK_ERR_ DESC_1		

Analog Input (AI) Block Parameters

Table 51 - FOUNDATION Fieldbus AI Block Parameters

Index	Name	Capability	Factory Default	Comments
1	ST_REV	Read only	0	This parameter reflects the revision level of the static data associated with the function block, and is incremented on each modification of static data.
2	TAG_DESC	Up to 32 characters	blank	User description of the block application.
3	STRATEGY	0 to 65,535	0	Setting this parameter allows you to organize blocks into groups. Enter the same numeric value into the STRATEGY parameter of the blocks you want to group.
4	ALERT_KEY	1 to 255; reset by using the RESTART parameter (Restart with defaults)	0	This parameter allows you to set the identification number of the plant unit. This parameter can be reported in alarm messages and allows the host to sort and filter alarms. This value is used in combination with the following parameters when broadcasting alarms: • UPDATE_EVT • BLOCK_ALM • HI_HI_ALM • HI_ALM • LO_ALM • LO_LO_ALM
5	MODE_BLK	Auto Man OOS	Target: OOS Permitted: Auto, Man, OOS Normal: OOS Actual: OOS	This parameter stores the Actual, Target, Permitted, and Normal modes of the block, and supports the following operating modes: • Actual mode: The current mode of the block • Target mode: The mode requested by the operator • Permitted modes: All of the modes allowed for this block • Normal mode: The mode of the block during normal operations; can be any single valid Target mode
6	BLOCK_ERR	Out-of-Service Sensor Failure Simulate Active Block Configuration Error	0	Read only parameter that represents the error status associated with the hardware or software components associated with this block. This parameter is reported to the host via the BLOCK_ALM parameter. In some cases, BLOCK_ERR_DESC_1 provides more information. Sensor Failure is set if PV has a BAD status, but will not be reported with a block alarm if the STATUS_OPTS bit “Propagate Fault Forward” is set. • Out-of-Service: If Actual Mode is Out of Service • Sensor Failure detected by this block/process variable has a status of “BAD, Sensor Failure” • Simulate Active: When the simulation jumper is installed; see *Setting the Write Protect Jumper, page 43* and *Setting the Simulate Jumper, page 44* • Block Configuration Error
7	PV	Read only, in OUT_SCALE units	0.0, BAD Out of Service	In the AI block, PV is the primary analog value and status from the Sensor variable after all scaling, limits, and filtering are done and if the mode is AUTO, it will be the value in the OUT parameter also but the status is different. In AUTO mode with a Good NC status, the substatus of PV is from the Transducer Block and the substatus of OUT is from the AI block. • Good (NC): Transducer block channel value has a Good status • Uncertain: Transducer block is in Manual mode or exceeds range in the Transducer block • Bad: AI block is OOS and/or Transducer block is OOS, MAN, or LO ◦ Bad with Device Failure substatus: loss of communication to sensor board ◦ Bad with Sensor Failure substatus: the sensor board is reporting a sensor failure

Table 51 - FOUNDATION Fieldbus AI Block Parameters (Continued)

Index	Name	Capability	Factory Default	Comments
8	OUT	Read only, except value can be written in MAN or OOS mode; limited to ±10% of OUT_SCALE	0.0, BAD Out of Service	This parameter reflects the primary analog value calculated in AUTO mode or manually set in MAN mode. In OOS mode, if the value written exceeds OUT_SCALE±10%, it will be clamped to the limit without error if the bit “Deferred_Write_Checks” in FEATURE_SEL is **not** set. When the mode changes, it is checked and limited if it still exceeds OUT_SCALE±10%. If the status of OUT is not GOOD when the Actual mode changes to MAN, the status will not change unless a new value is written to OUT. The new status depends on the “Uncertain” bit of STATUS_OPTS. When multiple Good (NC) substatus exist, the priority is: • Unacknowledged > Active • Unacknowledged > Nonspecific • Advisory > Block • Critical > Advisory; where Critical is defined as an alarm with a priority of 8 through 15 and Advisory is defined as an alarm with a priority of 3 through 7 Possible status and substatus settings are as follows: • Good (NC) status with non-specific substatus: no unacknowledged or active alarms, and the Transducer block channel value has Good status. • Good (NC) status with Active Block Alarm substatus: see BLOCK_ERR • Good (NC) status with Active Advisory Alarm substatus: Active HI_HI, HI, LO, or LO_LO alarm with priority 3 through 7 • Good (NC) status with Active Critical Alarm substatus: Active HI_HI, HI, LO, or LO_LO alarm with priority 8 through 15 • Good (NC) status with Unack Block Alarm substatus: Unacknowledged Block Alarm • Good (NC) status with Unack Advisory Alarm substatus: Unacknowledged Advisory Alarm • Good (NC) status with Unack Critical Alarm substatus: Unacknowledged Critical Alarm • Uncertain status with Non-specific substatus: Transducer block in MAN or exceeds range in Transducer Block • Uncertain status with Engineering Unit Range Violation substatus: value in AI block is over or under OUT_SCALE • Bad status with Non-specific substatus: Transducer block OOS, MAN, or LO • Bad status with Device Failure substatus: No communication to sensor board • Bad status with Sensor Failure substatus: Sensor board reporting sensor failure • Bad status with Out of Service substatus: AI block is OOS
9	SIMULATE	SIMULATE_STATUS SIMULATE_VALUE TRANSDUCER_STATUS TRANSDUCER_VALUE ENABLE_DISABLE 1=Disable 2=Enable	0, 0, 0, disable	When simulation is enabled, this parameter allows you to simulate the Transducer analog input or output to the block. When simulation is disabled, the simulate value and status track the Transducer value and status.

Table 51 - FOUNDATION Fieldbus AI Block Parameters (Continued)

Index	Name	Capability	Factory Default	Comments
10	XD_SCALE	EU_100 EU_0 UNITS_INDEX DECIMAL	AI1: 200, 0, 1148 (inH2O), 5 AI2: 125, -40, 1001 (°C), 5 AI3: 200, 0, 1148 (inH2O), 5	This parameter represents transducer scaling, including high and low scale values, engineering units, and resolution of the value obtained from the Transducer for a specified channel: • EU_100: Engineering units value at 100% of range • EU_0: Engineering units value at 0% of range • UNITS_INDEX: Engineering units; these engineering units must match the configured units in the Transducer block variable selected by the CHANNEL parameter • DECIMAL: Number of digits to the right of the decimal point
11	OUT_SCALE	EU_100 EU_0 UNITS_INDEX DECIMAL	100, 0, 1342 (%), 5	This parameter represents the output scale, including high and low scale values, engineering units, and resolution to be used in displaying the OUT parameter and other parameters that have the same scaling as OUT (including PV). • EU_100: Value in engineering units for range at 100% • EU_0: Value in engineering units for range at 0% • UNITS_INDEX: Engineering units • DECIMAL: Number of digits to the right of the decimal point When L_TYPE is Direct, the values of EU_100, EU_0, and UNITS_INDEX in XD_SCALE must match the values of the subparameters in OUT_SCALE. If they do not match, BLOCK_ERR reports a configuration error and BLOCK_ERR_DESC_1 is set accordingly.
12	GRANT_DENY	Grant/Deny can restrict or allow the following:	Grant: 0 Deny: 0	These options control access to operating, tuning, and alarm parameters by host computers or local control panels. These options are not used by the device; they are used by control system components. Grant/Deny can be set to allow or restrict the following operations:
		Program		The ability of an operator to change the Target Mode, Setpoint[224], or Output[225]
		Tune		The ability of an operator or local operator panel to change tuning parameters
		Alarm		The ability of an operator or local operator panel to change the alarm parameters of the block
		Local		The ability of a local operator panel to change the target mode, Setpoint[224], or Output[225]
		Operate		The ability to manipulate the operate parameters for daily plant production
		Service		The ability to perform engineering maintenance work on the device, such as calibration or replacement of sensor or electronics
		Diagnostic		The ability of maintenance or engineering personnel to change or check for device diagnostics
13	IO_OPTS	Read only except in OOS Low Cutoff	0	This parameter allows you to choose options that alter input and output block processing. Bit 10, Low cutoff, enables the AI low cutoff algorithm.
14	STATUS_OPTS	Propagate Fault Forward Uncertain if Limited BAD if Limited Uncertain if Man	0	This parameter allows you to choose how the block processes status: • Propagate Fault Forward: if not set, generates a block alarm if the output status is Bad • Uncertain if Limited: Sets the output status to Uncertain if the value is limited • BAD if Limited: Sets the output status to BAD if the sensor is at a high or low limit • Uncertain if Man: sets the output status to Uncertain when the block's Actual mode is MAN

224. Setpoints can be changed only if the block mode is Man or Auto.
225. Outputs can be changed only if the block mode is Man.

Table 51 - FOUNDATION Fieldbus AI Block Parameters (Continued)

Index	Name	Capability	Factory Default	Comments
15	CHANNEL			This parameter defines the number of the logical hardware channel connected to this I/O block; defines the transducer to be used going to or from the physical world: **Channel** / **Source** / **Transducer Parameter Name** 1 / Pressure / Primary Value 2 / Sensor Temperature / Secondary Value 3 / Pressure or Flow in Third Value units / Third Value 4 / Electronics Temperature / Fourth Value
16	L_TYPE	Read only except in OOS or MAN Uninitialized Direct Indirect Ind Sqr Root (DP only)	2	This parameter determines whether the values the Transducer block passes to the AI block should be used directly or should be converted: • Direct: Values passed by the Transducer block can be used directly by the AI block • Indirect: Values passed by the Transducer block to the AI block are in different units and must be converted linearly • Ind Sqr Root: (DP transmitters only) Values passed by the Transducer block to the AI block are in different units and must be converted using the input range defined for the Transducer and the associated output range with a square root conversion, which is used to convert differential pressure to a flow rate. When L_TYPE is Direct, the values of EU_100, EU_0, and UNITS_INDEX in XD_SCALE must match the values of the same subparameters in OUT_SCALE. If they do not match, BLOCK_ERR reports a configuration error and BLOCK_ERR_DESC_1 is set accordingly.
17	LOW_CUT		0	This parameter is used primarily for flow, which is applicable only to DP transmitters. However, this parameter can also help eliminate electrical noise near zero from a flow or pressure sensor. If the Transducer value falls below this limit in percent of scale, a value of zero percent of scale is used in block processing.
18	PV_FTIME		0	This parameter represents the filter time constant for the PV in seconds.
19	FIELD_VAL	Read only		This parameter stores the raw value of the field device in % of XD_SCALE with a status reflecting the Transducer condition, before signal characterization (L_TYPE) or filtering (PV_FTIME). The status of this parameter is the same as PV status.
20	UPDATE_EVT	System Parameter:		This parameter provides an alert generated by any change to the block's static data. Only Unacknowledged is writable.
		Unacknowledged	0	Unacknowledged: Set to Unacknowledged on a new alert; set to Acknowledged to indicate that the alert has been noticed: 1. Acknowledged 2. Unacknowledged
		Update State	0	Update State: Gives an indication that the host has received an alert; automatically set to Update reported when not configured to communicate to the host: 1. Update reported 2. Update not reported
		Time Stamp	0	Time Stamp: Time when the parameter was updated
		Static Revision	0	Static Revision: ST_REV after parameter was updated or transitioned from OOS when parameters were changed
		Relative Index	0	Relative Index: Relative index of the parameter that was updated, or 0 if more than one parameter changed

Table 51 - FOUNDATION Fieldbus AI Block Parameters (Continued)

Index	Name	Capability	Factory Default	Comments
21	BLOCK_ALM	System Parameter:		This parameter provides an alert that is generated by any error in BLOCK_ERR:
		Unacknowledged		Unacknowledged: Set to Unacknowledged on a new alert; set to Acknowledged to indicate that the alert has been noticed: 1. Acknowledged 2. Unacknowledged
		Alarm State		Alarm State: Gives indication that the host has received an alert; automatically set to Active reported when not configured to communicate to host: 1. Clear reported 2. Clear not reported 3. Active reported 4. Active not reported
		Time Stamp		Time Stamp: Time when the alert was generated
		Subcode		Subcode: Cause of the alert (bit number of error in BLOCK_ERR if FEATURE_SEL•MultiBit is 0, or value of BLOCK_ERR if FEATURE_SEL•MultiBit is 1)
		Value		Value: The value of the associated parameter (always 0 if FEATURE_SEL•MultiBit is 0, or bit number of error in BLOCK_ERR if FEATURE_SEL•MultiBit is 1)
22	ALARM_SUM	Current Alarms Unacknowledged Unreported Disabled	All alarms disabled	This parameter stores a summary of alarms associated with the block: • Current Alarms: the active status of each alarm • Unacknowledged: unacknowledged state of each alarm • Unreported: unreported status of each alarm • Disabled: use this parameter to disable or enable each alarm; only Disabled is writable Types of alarms in the Resource block include: • Discrete alarms • High high alarm • High alarm • Low low alarm • Low alarm • Deviation high alarm • Deviation low alarm • Block alarm
23	ACK_OPTION	0 or 1	All disabled	This parameter allows you to automatically acknowledge alarms associated with the block: 0. Auto Ack Disabled 1. Auto Ack Enabled
24	ALARM_HYS	0 to 50% of the PV span	0	This parameter allows you to set the amount the PV must return within the alarm limits before the alarm condition clears. Alarm hysteresis is expressed as a percent of PV span.
25	HI_HI_PRI	0 to 15	0	This parameter allows you to set the priority of the High-High alarm: • 0: If Active, the alarm will clear • 1: Alarm occurs and clears, but is not reported to the fieldbus host system • 2: Reserved for block alarms and alarms that do not require attention • 3-7: Advisory alarms (3=lowest priority advisory alarm, 7=highest priority advisory alarm) are sent to the fieldbus host system • 8-15: Critical alarms (8=lowest priority critical alarm, 15=highest priority critical alarm) are sent to the fieldbus host system

Table 51 - FOUNDATION Fieldbus AI Block Parameters (Continued)

Index	Name	Capability	Factory Default	Comments
26	HI_HI_LIM	Usable range defined (but not limited) by OUT_ SCALE	+INF	This parameter allows you to set the High-High alarm limit in engineering units. The alarm is based on the value of PV.
27	HI_PRI	0 to 15	0	This parameter allows you to set the priority of the High alarm: • 0: If Active, the alarm will clear • 1: Alarm occurs and clears, but is not reported to the fieldbus host system • 2: Reserved for block alarms and alarms that do not require attention • 3-7: Advisory alarms (3=lowest priority advisory alarm, 7=highest priority advisory alarm) are sent to the fieldbus host system • 8-15: Critical alarms (8=lowest priority critical alarm, 15=highest priority critical alarm) are sent to the fieldbus host system
28	HI_LIM	Usable range defined by (but not limited by) OUT_SCALE	+INF	This parameter allows you to set the High alarm limit in engineering units. The alarm is based on the value of PV.
29	LO_PRI	0 to 15	0	This parameter allows you to set the priority of the Low alarm: • 0: If Active, the alarm will clear • 1: Alarm occurs and clears, but is not reported to the fieldbus host system • 2: Reserved for block alarms and alarms that do not require attention • 3-7: Advisory alarms (3=lowest priority advisory alarm, 7=highest priority advisory alarm) are sent to the fieldbus host system • 8-15: Critical alarms (8=lowest priority critical alarm, 15=highest priority critical alarm) are sent to the fieldbus host system
30	LO_LIM	Usable range defined by (but not limited by) OUT_SCALE	-INF	This parameter allows you to set the Low alarm limit in engineering units. The alarm is based on the value of PV.
31	LO_LO_PRI	0 to 15	0	This parameter allows you to set the priority of the Low-Low alarm: • 0: If Active, the alarm will clear • 1: Alarm occurs and clears, but is not reported to the fieldbus host system • 2: Reserved for block alarms and alarms that do not require attention • 3-7: Advisory alarms (3=lowest priority advisory alarm, 7=highest priority advisory alarm) are sent to the fieldbus host system • 8-15: Critical alarms (8=lowest priority critical alarm, 15=highest priority critical alarm) are sent to the fieldbus host system
32	LO_LO_LIM	Usable range defined by (but not limited by) OUT_SCALE	-INF	This parameter allows you to set the Low-Low alarm limit in engineering units. The alarm is based on the value of PV.

Table 51 - FOUNDATION Fieldbus AI Block Parameters (Continued)

Index	Name	Capability	Factory Default	Comments
33	HI_HI_ALM	System Parameter; Read only except for Unacknowl-edged:		This alert is generated when the OUT parameter exceeds the High-High limit:
		Unacknowledged	0	Unacknowledged: Set to Unacknowledged on a new alert; set to Acknowledged to indicate that the alert has been noticed: 1. Acknowledged 2. Unacknowledged
		Alarm State	0	Alarm State: Gives indication that the host has received an alert; automatically set to Active reported when not configured to communicate to host: 1. Clear reported 2. Clear not reported 3. Active reported 4. Active not reported
		Time Stamp	0	Time Stamp: Time when the alert was generated
		Subcode	0	Subcode: 0
		Value	0	Value: The value of the associated parameter
34	HI_ALM	System Parameter; Read only except for Unacknowl-edged:		This alert is generated when the OUT parameter exceeds the High limit:
		Unacknowledged	0	Unacknowledged: Set to Unacknowledged on a new alert; set to Acknowledged to indicate that the alert has been noticed: 1. Acknowledged 2. Unacknowledged
		Alarm State	0	Alarm State: Gives indication that the host has received an alert; automatically set to Active reported when not configured to communicate to host: 1. Clear reported 2. Clear not reported 3. Active reported 4. Active not reported
		Time Stamp	0	Time Stamp: Time when the alert was generated
		Subcode	0	Subcode: 0
		Value	0	Value: The value of the associated parameter

Table 51 - FOUNDATION Fieldbus AI Block Parameters (Continued)

Index	Name	Capability	Factory Default	Comments
35	LO_ALM	System Parameter; Read only except for Unacknowl-edged:		This alert is generated when the OUT parameter is below the Low limit:
		Unacknowledged	0	Unacknowledged: Set to Unacknowledged on a new alert; set to Acknowledged to indicate that the alert has been noticed: 1. Acknowledged 2. Unacknowledged
		Alarm State	0	Alarm State: Gives indication that the host has received an alert; automatically set to Active reported when not configured to communicate to host: 1. Clear reported 2. Clear not reported 3. Active reported 4. Active not reported
		Time Stamp	0	Time Stamp: Time when the alert was generated
		Subcode	0	Subcode: 0
		Value	0	Value: The value of the associated parameter
36	LO_LO_ALM	System Parameter; Read only except for Unacknowledge:		This alert is generated when the OUT parameter is below the Low-Low limit:
		Unacknowledged	0	Unacknowledged: Set to Unacknowledged on a new alert; set to Acknowledged to indicate that the alert has been noticed: 1. Acknowledged 2. Unacknowledged
		Alarm State	0	Alarm State: Gives indication that the host has received an alert; automatically set to Active reported when not configured to communicate to host: 1. Clear reported 2. Clear not reported 3. Active reported 4. Active not reported
		Time Stamp	0	Time Stamp: Time when the alert was generated
		Subcode	0	Subcode: 0
		Value	0	Value: The value of the associated parameter
37	OUT_D	Read only except in Manual or OOS modes: 0 = OFF 1 = ON Used as a means to communicate a process alarm state as a process variable	0, Bad Out of Service	The value of this parameter is OFF unless one or more alarms selected in OUT_D_SEL is active while in Auto mode. The value can be written if in Manual or OOS mode, but the status is never writable. If the mode changes from OOS to MAN, the status is BAD with a substatus of Non Specific until a value is written. The status then changes to Uncertain or Good Non Cascade, Non Specific, Constant depending on the options in STATUS_OPTS. If the mode changes from AUTO to MAN, the status is immediately changed according to STATUS_OPTS with a substatus of Non Specific, Constant. The status is always the same as PV while the mode is AUTO, and is always BAD Out of Service while the mode is OOS.

Table 51 - FOUNDATION Fieldbus AI Block Parameters (Continued)

Index	Name	Capability	Factory Default	Comments
38	OUT_D_SEL		0	This parameter allows you to select which alarms activate OUT_D. If no alarms are selected, OUT_D remains OFF while the mode is AUTO. • 0: HI_HI_ALM: OUT_D is true if HI_HI_ALM is active • 1: HI_ALM: OUT_D is true if HI_HI_ALM is active • 2: LO_ALM: OUT_D is true if LO_ALM is active • 3: LO_LO_ALM: OUT_D is true if LO_LO_ALM is active
39	BLOCK_ERR_ DESC_1			This parameter is used by the block to report more specific details regarding persistent errors that are reported through BLOCK_ERR: 0 XD_SCALE•EU_0 greater than or equal to XD_ SCALE•EU100 — Low end of scale must be less than high end; error occurs only when XD_SCALE written by subindex 1 OUT_SCALE•EU_0 greater than or equal to OUT_ SCALE•EU100 — Low end of scale must be less than high end; error occurs only when XD_SCALE written by subindex 2 OUT_SCALE not equal to XD_SCALE and L_TYPE is Direct — Scales must match if L_TYPE is direct; decimal subindex does not have to match 3 XD_SCALE•UNITS_INDEX not equal to Pressure units — Primary Value Units must match between AI block and Transducer block 4 XD_SCALE•UNITS_INDEX not equal to Sensor Temperature units — Secondary Value Units must match between AI block and Transducer block 5 XD_SCALE•UNITS_INDEX not equal to Alt. Pressure or Flow units — Third Value Units must match between AI block and Transducer block 6 XD_SCALE•UNITS_INDEX not equal to Electronics Temperature units — Fourth Value Units must match between AI block and Transducer block 11 AI block not scheduled — AI block must be scheduled to run by a Host; Period of Execution in Block Header not initialized 12 Invalid Channel — AI block channel must be 1–4 15 Resource block mode Out of Service — Resource Block must be in AUTO mode 16 Transducer block mode not in AUTO or Bad Sensor — Transducer Block must be in AUTO mode or the Sensor is Bad

PID Block Parameters

Table 52 - FOUNDATION Fieldbus Resource Block Parameters

Index	Name	Capability	Factory Default	Comments
1	ST_REV	Read only	0	This parameter reflects the revision level of the static data associated with the function block, and is incremented on each modification of static data.
2	TAG_DESC	Up to 32 characters	blank	User description of the block application.
3	STRATEGY	0 to 65,535	0	Setting this parameter allows you to organize blocks into groups. Enter the same numeric value into the STRATEGY parameter of the blocks you want to group.

Table 52 - FOUNDATION Fieldbus Resource Block Parameters (Continued)

Index	Name	Capability	Factory Default	Comments
4	ALERT_KEY	1 to 255	0	This parameter allows you to set the identification number of the plant unit. This parameter can be reported in alarm messages and allows the host to sort and filter alarms. This value is used in combination with the following parameters when broadcasting alarms: • UPDATE_EVT • BLOCK_ALM • HI_HI_ALM • HI_ALM • LO_ALM • LO_LO_ALM • DIV_HI_ALM • DIV_LO_ALM
5	MODE_BLK	O/S, IMan, LO, Man, Auto, Cas, RCas, ROut	Target: OOS Permitted: OOS Normal: OOS Actual: OOS	This parameter stores the Actual, Target, Permitted, and Normal modes of the block, and supports the following operating modes: • Actual mode: The current mode of the block • Target mode: The mode requested by operator • Permitted modes: All of the modes allowed for this block • Normal mode: The mode of the block during normal operations; can be any single valid Target mode The following modes are supported: • O/S (Out of Service): No algorithm is executing, and the output status is BAD, Out of Service • IMan (Initialization Manual): Actual mode when the Target mode is MAN or greater, but the BKCAL_IN input is BAD, indicating that the downstream block is not communicating • LO (Local Override): Actual mode when the Target mode is MAN or greater, but the TRK_VAL and TRK_IN_D inputs are valid. The output value comes from TRK_VAL. • MAN (Manual): The Target and Actual mode when the output can be directly set. If the PV's status is not GOOD, the Actual mode can only be MAN even though the Target mode is higher. • AUTO (Automatic): Target and Actual mode when the output is computed from a constant setpoint (SP) and a valid PV • CAS (Cascade): CAS mode is the same as AUTO, except the SP comes from the CAS input • RCAS (Remote Cascade): RCAS mode is the same as AUTO, except the SP comes from the RCAS input. The RCAS_IN input must be written to periodically faster than the time specified in the Resource block parameter SHED_RCAS. • ROUT (Remote Output): Actual and Target mode where the output value comes from the ROUT_IN parameter. The ROUT_IN input must be written to periodically faster than the time specified in the Resource block parameter SHED_ROUT. The cascade inputs and outputs must complete an initialization sequence before the corresponding Actual modes are achieved. The cascade pairs are: • OUT and BKCAL_IN for MAN mode or greater • CAS_IN and BKCAL_OUT for CAS mode • RCAS_IN and RCAS_OUT for RCAS mode • ROUT_IN and ROUT_OUT for ROUT mode
6	BLOCK_ERR	Out-of-Service Local Override Block Configuration Error	0	Read only parameter that reflects the error status associated with the hardware or software components associated with this block. This parameter is reported to the host via the BLOCK_ALM parameter. In some cases, BLOCK_ERR_DESC_1 provides more information.

Table 52 - FOUNDATION Fieldbus Resource Block Parameters (Continued)

Index	Name	Capability	Factory Default	Comments
7	PV	Read only, in PV_SCALE units	0, BAD Out of Service	In the PID block, PV is either the primary analog value and status used to execute the function, or a process value and associated status. Similar to the OUT parameter in the AI block, the PV substatus reflects the alarm status of the PID block. In the PID block, the value of PV is the IN value after filtering with the PV_TIME filter and the evaluation of the “Use Uncertain as Good” option in STATUS_OPTS. When multiple Good (NC) substatuses exist, the priority is: • Unacknowledged > Active • Unacknowledged > Non-specific • Advisory > Block • Critical > Advisory • Critical alarms have a priority of 8 through 15 • Advisory alarms have a priority of 3 through 7 Status is: • Good (NC) Non-specific • Good (NC) Active Block Alarm • Good (NC) Active Advisory Alarm • Good (NC) Active Critical Alarm • Good (NC) Unack Block Alarm • Good (NC) Unack Advisory Alarm • Good (NC) Unack Critical Alarm • Bad Non-specific • Bad Out of Service With no active or unacknowledged alarms, a Good (NC) status will have a substatus of Non-specific.
8	SP	Read only except in OOS, Man, or AUTO; in PV_ SCALE units	0	This parameter reflects the analog setpoint of this block; the value is writable and the associated status is calculated. In CAS or RCAS modes, the SP value comes from the CAS or RCAS inputs respectively.
9	OUT	Read only, except value can be written in MAN or OOS mode; limited to ±10% of OUT_ SCALE	BAD Out of Service, 0	This parameter reflects the primary analog value calculated in AUTO mode, remotely set by ROUT_IN, set by TRK_VAL in a Local Override mode, or manually set in MAN mode.
10	PV_SCALE	Read only except in OOS mode	0-100%, 5	This parameter represents the high and low scale values, engineering units, and resolution to be used in displaying the PV parameter and other parameters that have the same scaling as PV (including IN, SP, CAS_IN, BKCAL_OUT, RCAS_IN, and RCAS_OUT).
11	OUT_SCALE	Read only except in OOS mode	100, 0, 1342 (%), 5	This parameter represents the output scale, including high and low scale values, engineering units, and resolution to be used in displaying the OUT parameter and other parameters that have the same scaling as OUT (including BKCAL_IN, ROUT_IN, AND ROUT_OUT).

Table 52 - FOUNDATION Fieldbus Resource Block Parameters (Continued)

Index	Name	Capability	Factory Default	Comments
12	GRANT_DENY	Grant/Deny can restrict or allow the following:	Grant: 0 Deny: 0	These options control access to operating, tuning, and alarm parameters by host computers or local control panels. These options are not used by the device; they are used by control system components. Grant/Deny can be set to allow or restrict the following operations:
		Program		The ability of an operator to change the Target Mode, Setpoint[226], or Output[227]
		Tune		The ability of an operator or local operator panel to change tuning parameters
		Alarm		The ability of an operator or local operator panel to change the alarm parameters of the block
		Local		The ability of a local operator panel to change the target mode, Setpoint[226], or Output[227]
		Operate		The ability to manipulate the operate parameters for daily plant production
		Service		The ability to perform engineering maintenance work on the device, such as calibration or replacement of sensor or electronics
		Diagnostic		The ability of maintenance or engineering personnel to change or check for device diagnostics
13	CONTROL_ OPTS	Read only except in OOS	0	This parameter allows you to choose options that alter input and output block processing: • Bypass Enable • SP-PV Track in Man • SP-PV Track in ROut • SP-PV Track in LO or IMan • SP Track retained target • Direct Acting • Track if Bad TRK_IN_D • Track Enable • Track in Manual • Use PV for BKCAL_OUT • Obey SP limits if Cas or RCas • No OUT limits in Manual
14	STATUS_OPTS	Read only except in OOS	0	This parameter allows you to choose how the block processes status. The IFS (Initiate Fault State) is a substatus set in OUT if the status of OUT is GOOD Cas and the condition in the table below is true with the corresponding option set: • IFS if BAD IN: if IN is BAD, this option sets OUT to GC, Initiate Fault State • IFS if BAD CAS_IN: if CAS_IN is BAD, this option sets OUT to GC, Initiate Fault State • Use Uncertain as Good: this option treats the Uncertain status of the IN parameter as Good • Target to MAN if BAD IN: if the status of IN is BAD, this option sets the Target mode to MAN • Target to next permitted mode if BAD_CAS_IN: if Target mode is CAS and BAD, this option sets the target to the next permitted mode • Target to MAN if BAD_TRK_IN_D: this option sets the Target mode to MAN if MAN mode is permitted • IFS if BAD TRK_IN_D: if the status of TRK_IN_D is BAD, this option sets the IFS Status in OUT

226. Setpoints can be changed only if the block mode is Man or Auto.
227. Outputs can be changed only if the block mode is Man.

Table 52 - FOUNDATION Fieldbus Resource Block Parameters (Continued)

Index	Name	Capability	Factory Default	Comments
15	IN	PV_SCALE units	Bad, Not Connected, Constant, 0	This parameter defines the primary analog input value and status representing a measured or calculated value. A BAD status or an UNCERTAIN status without the STATUS_OPTS of “Use Uncertain as Good” results in an Actual mode of MAN or less. Because the status of IN can vary, the status is filtered to the statuses allowed by the PV parameter.
16	PV_FTIME	Non-negative values	0	This parameter represents the filter time constant for the PV in seconds.
17	BYPASS	Read only except when CONTROL_ OPTS “Bypass Enable” bit is set to allow the On (2) state to be written in any mode. AUTO, CAS, and RCAS modes also require that the FEATURE_SEL “Change of BYPASS” bit is set in Auto mode. Clearing the FEATURE_SEL bit has no effect. Writing in ROUT, LO, or IMAN mode is not allowed.	0	This parameter allows you to bypass the normal control algorithm. When Bypass is On, the setpoint value SP (in percent) is transferred directly to the output. To prevent a bump on transfer to/from bypass, the setpoint is automatically \initialized to the output value OUT, or process variable PV, respectively, and the path broken flag is set for one execution. This is not affected by the CONTROL_OPTS Direct Acting setting.
18	CAS_IN	PV_SCALE units	BAD, Not Connected, Constant, 0	This parameter is the remote setpoint value that must come from another FOUNDATION Fieldbus block or a DCS block through a defined link for use in the CAS mode.
19	SP_RATE_DN	Positive	+INF	This parameter allows you to set the ramp rate at which downward setpoint changes are acted on in Auto mode, in PV units per second. If the ramp rate is set to zero, the setpoint is used immediately. For control blocks, rate limiting applies only in Auto mode. For output blocks, rate limiting applies in Auto, Cas, and RCas modes.
20	SP_RATE_UP	Positive	+INF	This parameter allows you to set the ramp rate at which upward setpoint changes are acted on in Auto mode, in PV units per second. If the ramp rate is set to zero, the setpoint is used immediately. For control blocks, rate limiting applies only in Auto mode. For output blocks, rate limiting applies in Auto, Cas, and RCas modes.
21	SP_HI_LIM	PV_SCALE±10%	100.0	This parameter represents the setpoint high limit, which is the highest setpoint operator entry that can be used for the block. This parameter is also used if the “Obey SP limits if Cas or RCas” bit of the CONTROL_ OPTS parameter is set. Writing a value greater than PV_SCALE±10% can be attempted, but the value is reduced to PV_SCALE±10%.
22	SP_LO_LIM	PV_SCALE±10%	0.0	This parameter represents the setpoint low limit, which is the lowest setpoint operator entry that can be used for the block. This parameter is also used if the “Obey SP limits if Cas or RCas” bit of the CONTROL_ OPTS is set. Writing a value greater than PV_SCALE±10% can be attempted, but the value is reduced to PV_SCALE±10%.
23	GAIN	Non-negative	0.0	This parameter allows you to set the value used by the block algorithm against the difference of the working setpoint and the PV in calculating the block output.
24	RESET	Non-negative	+INF	This parameter represents the integral time constant in seconds per repeat.
25	BAL_TIME	Positive	0	This parameter allows you to set the difference value used in the block calculation for bumpless transfer should ramp to zero in the time specified by BAL_TIME.

Table 52 - FOUNDATION Fieldbus Resource Block Parameters (Continued)

Index	Name	Capability	Factory Default	Comments
26	RATE	Non-negative	0	This parameter defines the derivative time constant, in seconds.
27	BKCAL_IN	OUT_SCALE units	BAD, Not Connected, Constant, 0	This parameter represents the value and status from a lower block's BKCAL_OUT parameter.
28	OUT_HI_LIM	OUT_SCALE ±10%	100	This parameter limits the maximum output value. • It can be overridden in MAN mode if the "No OUT limits in Manual" bit of the CONTROL_OPTS parameter is selected. • Writing a value greater than OUT_SCALE±10% can be attempted, but the value is reduced to OUT_SCALE±10%. • If OUT_SCALE is written, OUT_HI_LIM is modified if it exceeds OUT_SCALE±10%.
29	OUT_LO_LIM	OUT_SCALE ±10%	0	This parameter limits the minimum output value. • It can be overridden in MAN mode if the "No OUT limits in Manual" bit of the CONTROL_OPTS parameter is selected. • Writing a value greater than OUT_SCALE±10% can be attempted, but the value is reduced to OUT_SCALE±10%. • If OUT_SCALE is written, OUT_LO_LIM is modified if it exceeds OUT_SCALE±10%.
30	BKCAL_HYS	0 to 50%	0.5%	This parameter allows you to set the amount that the output must change away from its output limit before the limit status is turned off, expressed as a percent of the span of the output.
31	BKCAL_OUT	Read only	BAD, Out of Service, 0	This parameter represents the value and status required by an upper block's BKCAL_IN so that the upper block can prevent reset windup and provide bumpless transfer to closed loop control. The Actual mode of CAS is achieved when the substatus of BKCAL_OUT is used in conjunction with CAS_IN to handshake with the upper block.
32	RCAS_IN	PV_SCALE units	BAD, Out of Service, 0	This parameter allows the host to provide a target setpoint and status for the RCAS mode.
33	ROUT_IN	OUT_SCALE units	BAD, Out of Service, 0	This parameter allows the host to provide a target output and status for use as the OUT value in the ROUT mode.
34	SHED_OPT	1–8	0	This parameter allows you to define the action to be taken in the remote-cascade (RCAS) or remote-output (ROUT) mode timeout. The shed mode for options 3,4,5 and 6 prevails, even if the Permitted attribute of the block Mode parameter does not include the specified shed mode. If the specified shed mode is not a Permitted mode, then the "Configuration Error" indication in Block Error is set by the block. If the option includes "no return", the PID block modifies the value of the Target mode parameter. • 0. Undefined; Configuration Error • 1. Normal shed, normal return; Actual mode changes to the next lowest priority non-remote mode permitted, but returns to the target remote mode when the remote computer completes the initialization handshake • 2. Normal shed, no return; target mode changes to the next lowest priority non-remote mode permitted. The target remote mode is lost, so there is no return to it. • 3. Shed to Auto, normal return • 4. Shed to Auto, no return; Target mode changes to Auto on detection of a shed condition • 5. Shed to Manual, normal return • 6. Shed to Manual, no return: Target mode changes to Man on detection of a shed condition. When the target mode is set to Manual, the Retained bits will be set to zero (0) • 7. Shed to Retained target, normal return • 8. Shed to Retained target, no return (change target to retained target)
35	RCAS_OUT	Read only; in PV_SCALE units	BAD, Out of Service, 0	This parameter represents the block setpoint and status after ramping; provided to a supervisory host for back calculation and to allow action to be taken under limiting conditions or mode change for the RCAS mode.

Table 52 - FOUNDATION Fieldbus Resource Block Parameters (Continued)

Index	Name	Capability	Factory Default	Comments
36	ROUT_OUT	Read only; in OUT_SCALE units	BAD, Out of Service, 0	This parameter represents block output and status; provided to a host for back calculation in ROUT mode and to allow action to be taken under limited conditions or mode change for the ROUT mode.
37	TRK_SCALE	Read only except in OOS: EU_100 EU_0 UNITS_INDEX DECIMAL	0–100%	This parameter allows you to set the high and low scale values, engineering units, and resolution associated with TRK_VAL: • EU_100: Engineering units value at 100% of scale • EU_0: Engineering units value at 0% of scale • UNITS_INDEX: Engineering units • DECIMAL: Number of digits to the right of the decimal point
38	TRK_IN_D	OFF=0 ON=1	BAD, Not Connected, Constant, 0	This discrete input is used to initiate external tracking of the block output to the value specified by TRK_VAL. Bad status can be ignored if you set the “Track if Bad TRK_IN_D” bit of the CONTROL_OPTS parameter or change the mode with STATUS_OPTS bit “Target to MAN if BAD TRK_IN_D.” The Actual mode is “Local Override” to indicate that tracking is active.
39	TRK_VAL	TRK_SCALE units	BAD, Not Connected, Constant, 0	This parameter reflects the input used as the track value when external tracking is enabled by TRK_IN_D and the “Track Enable” bit is enabled in the CONTROL_OPTS parameter. The Actual mode is “Local Override” to indicate that tracking is active.
40	FF_VAL	FF_SCALE units	BAD, Not Connected, Constant, 0	This parameter allows you to set the feed forward value and status which, when the status is GOOD, is added to the value of OUT in Auto mode when scaling and gain are taken into consideration.
41	FF_SCALE	Read only except in OOS or MAN: EU_100 EU_0 UNITS_INDEX DECIMAL	0–100%	This parameter allows you to set the feed forward input high and low scale values, engineering units, and resolution associated with FF_VAL: • EU_100: Engineering units value at 100% of scale • EU_0: Engineering units value at 0% of scale • UNITS_INDEX: Engineering units • DECIMAL: Number of digits to the right of the decimal point
42	FF_GAIN	Read only except in OOS or MAN	0.0	This parameter allows you to set the gain that the feed forward input FF_VAL is multiplied by before it is added to the calculated control output.
43	UPDATE_EVT	System Parameter:		This parameter provides an alert generated by any change to the block’s static data. Only Unacknowledged is writable.
		Unacknowledged	0	Unacknowledged: Set to Unacknowledged on a new alert; set to Acknowledged to indicate that the alert has been noticed: 1. Acknowledged 2. Unacknowledged
		Update State	0	Update State: Gives an indication that the host has received an alert; automatically set to Update reported when not configured to communicate to the host: 1. Update reported 2. Update not reported
		Time Stamp	0	Time Stamp: Time when the parameter was updated
		Static Revision	0	Static Revision: ST_REV after parameter was updated or transitioned from OOS when parameters were changed
		Relative Index	0	Relative Index: Relative index of the parameter that was updated, or 0 if more than one parameter changed

Table 52 - FOUNDATION Fieldbus Resource Block Parameters (Continued)

Index	Name	Capability	Factory Default	Comments
44	BLOCK_ALM	System Parameter:		This parameter provides an alert that is generated by any error in BLOCK_ERR:
		Unacknowledged	0	Unacknowledged: Set to Unacknowledged on a new alert; set to Acknowledged to indicate that the alert has been noticed: 1. Acknowledged 2. Unacknowledged
		Alarm State	0	Alarm State: Gives indication that the host has received an alert; automatically set to Active reported when not configured to communicate to host: 1. Clear reported 2. Clear not reported 3. Active reported 4. Active not reported
		Time Stamp	0	Time Stamp: Time when the alert was generated
		Subcode	0	Subcode: Cause of the alert (bit number of error in BLOCK_ERR if FEATURE_SEL•MultiBit is 0, or value of BLOCK_ERR if FEATURE_SEL•MultiBit is 1)
		Value	0	Value: The value of the associated parameter (always 0 if FEATURE_SEL•MultiBit is 0, or bit number of error in BLOCK_ERR if FEATURE_SEL•MultiBit is 1)
45	ALARM_SUM	Current Alarms Unacknowledged Unreported Disabled	All alarms disabled	This parameter stores a summary of alarms associated with the block: • Current Alarms: The active status of each alarm • Unacknowledged: Unacknowledged state of each alarm • Unreported: Unreported status of each alarm • Disabled: Use this parameter to disable or enable each alarm; only Disabled is writable Types of alarms in the Resource block include: • Discrete alarms • High high alarm • High alarm • Low low alarm • Low alarm • Deviation high alarm • Deviation low alarm • Block alarm • Eight additional alarms defined in block profile
46	ACK_OPTION	0 or 1	0	This parameter allows you to automatically acknowledge alarms associated with the block: 0. Auto Ack Disabled 1. Auto Ack Enabled
47	ALARM_HYS	0 to 50% of the PV span	0.5%	This parameter allows you to set the amount the PV must return within the alarm limits before the alarm condition clears. Alarm hysteresis is expressed as a percent of PV span.

Table 52 - FOUNDATION Fieldbus Resource Block Parameters (Continued)

Index	Name	Capability	Factory Default	Comments
48	HI_HI_PRI	0 to 15	0	This parameter allows you to set the priority of the High-High alarm: • 0: If Active, the alarm will clear • 1: Alarm occurs and clears, but is not reported to the fieldbus host system • 2: Reserved for block alarms and alarms that do not require attention • 3-7: Advisory alarms (3=lowest priority advisory alarm, 7=highest priority advisory alarm) are sent to the fieldbus host system • 8-15: Critical alarms (8=lowest priority critical alarm, 15=highest priority critical alarm) are sent to the fieldbus host system
49	HI_HI_LIM	Usable range defined (but not limited) by PV_ SCALE	+INF	This parameter allows you to set the High-High alarm limit in engineering units. The alarm is based on the value of PV.
50	HI_PRI	0 to 15	0	This parameter allows you to set the priority of the High alarm: • 0: If Active, the alarm will clear • 1: Alarm occurs and clears, but is not reported to the fieldbus host system • 2: Reserved for block alarms and alarms that do not require attention • 3-7: Advisory alarms (3=lowest priority advisory alarm, 7=highest priority advisory alarm) are sent to the fieldbus host system • 8-15: Critical alarms (8=lowest priority critical alarm, 15=highest priority critical alarm) are sent to the fieldbus host system
51	HI_LIM	Usable range defined (but not limited) by PV_ SCALE	+INF	This parameter allows you to set the High alarm limit in engineering units. The alarm is based on the value of PV.
52	LO_PRI	0 to 15	0	This parameter allows you to set the priority of the Low alarm: • 0: If Active, the alarm will clear • 1: Alarm occurs and clears, but is not reported to the fieldbus host system • 2: Reserved for block alarms and alarms that do not require attention • 3-7: Advisory alarms (3=lowest priority advisory alarm, 7=highest priority advisory alarm) are sent to the fieldbus host system • 8-15: Critical alarms (8=lowest priority critical alarm, 15=highest priority critical alarm) are sent to the fieldbus host system
53	LO_LIM	Usable range defined (but not limited) by PV_ SCALE	+INF	This parameter allows you to set the Low alarm limit in engineering units. The alarm is based on the value of PV.
54	LO_LO_PRI	0 to 15	0	This parameter allows you to set the priority of the Low-Low alarm: • 0: If Active, the alarm will clear • 1: Alarm occurs and clears, but is not reported to the fieldbus host system • 2: Reserved for block alarms and alarms that do not require attention • 3-7: Advisory alarms (3=lowest priority advisory alarm, 7=highest priority advisory alarm) are sent to the fieldbus host system • 8-15: Critical alarms (8=lowest priority critical alarm, 15=highest priority critical alarm) are sent to the fieldbus host system
55	LO_LO_LIM	Usable range defined (but not limited) by PV_ SCALE	+INF	This parameter allows you to set the Low-Low alarm limit in engineering units. The alarm is based on the value of PV.

Table 52 - FOUNDATION Fieldbus Resource Block Parameters (Continued)

Index	Name	Capability	Factory Default	Comments
56	DV_HI_PRI	0 to 15	0	This parameter allows you to set the priority of the High Deviation alarm: • 0: If Active, the alarm will clear • 1: Alarm occurs and clears, but is not reported to the fieldbus host system • 2: Reserved for block alarms and alarms that do not require attention • 3-7: Advisory alarms (3=lowest priority advisory alarm, 7=highest priority advisory alarm) are sent to the fieldbus host system • 8-15: Critical alarms (8=lowest priority critical alarm, 15=highest priority critical alarm) are sent to the fieldbus host system
57	DV_HI_LIM	Positive	+INF	This parameter allows you to set the High Deviation alarm limit in engineering units. Normally, this parameter is in the range of 0 to PV_ SPAN, or +INF. The alarm is based on the difference between PV and the working setpoint.
58	DV_LO_PRI	0 to 15	0	This parameter allows you to set the priority of the Low Deviation alarm: • 0: If Active, the alarm will clear • 1: Alarm occurs and clears, but is not reported to the fieldbus host system • 2: Reserved for block alarms and alarms that do not require attention • 3-7: Advisory alarms (3=lowest priority advisory alarm, 7=highest priority advisory alarm) are sent to the fieldbus host system • 8-15: Critical alarms (8=lowest priority critical alarm, 15=highest priority critical alarm) are sent to the fieldbus host system
59	DV_LO_LIM	0 or negative	-INF	This parameter allows you to set the Low Deviation alarm limit in engineering units. The alarm is based on the value of PV. The alarm is based on the difference between PV and the working setpoint.
60	HI_HI_ALM	System Parameter; Read only except for Unacknowl-edged:		This alert is generated when the PV parameter exceeds the High-High limit:
		Unacknowledged	0	Unacknowledged: Set to Unacknowledged on a new alert; set to Acknowledged to indicate that the alert has been noticed: 1. Acknowledged 2. Unacknowledged
		Alarm State	0	Alarm State: Gives indication that the host has received the alert; automatically set to Active reported when not configured to communicate to host: 1. Clear reported 2. Clear not reported 3. Active reported 4. Active not reported
		Time Stamp	0	Time Stamp: Time when the alert was generated
		Subcode	0	Subcode: 0
		Value	0	Value: The value of the associated parameter

Table 52 - FOUNDATION Fieldbus Resource Block Parameters (Continued)

Index	Name	Capability	Factory Default	Comments
61	HI_ALM	System Parameter; Read only except for Unacknowl-edged:		This alert is generated when the PV parameter exceeds the High limit:
		Unacknowledged	0	Unacknowledged: Set to Unacknowledged on a new alert; set to Acknowledged to indicate that the alert has been noticed: 1. Acknowledged 2. Unacknowledged
		Alarm State	0	Alarm State: Gives indication that the host has received the alert; automatically set to Active reported when not configured to communicate to host: 1. Clear reported 2. Clear not reported 3. Active reported 4. Active not reported
		Time Stamp	0	Time Stamp: Time when the alert was generated
		Subcode	0	Subcode: 0
		Value	0	Value: The value of the associated parameter
62	LO_ALM	System Parameter; Read only except for Unacknowl-edged:		This alert is generated when the PV parameter is below the Low limit:
		Unacknowledged	0	Unacknowledged: Set to Unacknowledged on a new alert; set to Acknowledged to indicate that the alert has been noticed: 1. Acknowledged 2. Unacknowledged
		Alarm State	0	Alarm State: Gives indication that the host has received the alert; automatically set to Active reported when not configured to communicate to host: 1. Clear reported 2. Clear not reported 3. Active reported 4. Active not reported
		Time Stamp	0	Time Stamp: Time when the alert was generated
		Subcode	0	Subcode: 0
		Value	0	Value: The value of the associated parameter

Table 52 - FOUNDATION Fieldbus Resource Block Parameters (Continued)

Index	Name	Capability	Factory Default	Comments
63	LO_LO_ALM	System Parameter; Read only except for Unacknowl-edged:		This alert is generated when the PV parameter below the Low-Low limit:
		Unacknowledged	0	Unacknowledged: Set to Unacknowledged on a new alert; set to Acknowledged to indicate that the alert has been noticed: 1. Acknowledged 2. Unacknowledged
		Alarm State	0	Alarm State: Gives indication that the host has received the alert; automatically set to Active reported when not configured to communicate to host: 1. Clear reported 2. Clear not reported 3. Active reported 4. Active not reported
		Time Stamp	0	Time Stamp: Time when the alert was generated
		Subcode	0	Subcode: 0
		Value	0	Value: The value of the associated parameter
64	DV_HI_ALM	System Parameter; Read only except for Unacknowl-edged:		This alert is generated when the PV parameter exceeds the Deviation High limit:
		Unacknowledged	0	Unacknowledged: Set to Unacknowledged on a new alert; set to Acknowledged to indicate that the alert has been noticed: 1. Acknowledged 2. Unacknowledged
		Alarm State	0	Alarm State: Gives indication that the host has received the alert; automatically set to Active reported when not configured to communicate to host: 1. Clear reported 2. Clear not reported 3. Active reported 4. Active not reported
		Time Stamp	0	Time Stamp: Time when the alert was generated
		Subcode	0	Subcode: 0
		Value	0	Value: The value of the associated parameter

Table 52 - FOUNDATION Fieldbus Resource Block Parameters (Continued)

Index	Name	Capability	Factory Default	Comments
65	DV_LO_ALM	System Parameter; Read only except for Unacknowl-edged:		This alert is generated when the PV parameter is below the Deviation Low limit:
		Unacknowledged	0	Unacknowledged: Set to Unacknowledged on a new alert; set to Acknowledged to indicate that the alert has been noticed: 1. Acknowledged 2. Unacknowledged
		Alarm State	0	Alarm State: Gives indication that the host has received the alert; automatically set to Active reported when not configured to communicate to host: 1. Clear reported 2. Clear not reported 3. Active reported 4. Active not reported
		Time Stamp	0	Time Stamp: Time when the alert was generated
		Subcode	0	Subcode: 0
		Value	0	Value: The value of the associated parameter
66	SP_LAG	Range of 0.0 to 1.0	1.0	This parameter allows you to set the Setpoint Compensation Lag. The setpoint compensator allows the amount of proportional action applied to the setpoint to be less than that applied to the measurement. This compensation enables the controller to be tuned for good load rejection and non-overshooting setpoint response simultaneously. Its optimum value depends on the process type: a value of 0.2 for a dominant lag process, or a value of 1.0 for a dominant delay.
67	KDERIV	Normal range of greater than or equal to 10, Auto limited to greater than or equal to 1.0	10	This parameter allows you to set the measurement filter factor. Along with RATE, this parameter is part of the time constant of the measurement filter. For the PD and NIPID type of filter, the filter time constant is: RATE/KDERIV For the PID type, the filter constant is: (RATE * RESET)/((RATE+RESET)*KDERIV)
68	BIAS	OUT_SCALE ±10%	0.0	This parameter allows you to set the PID Bias, which provides a bias source to the output for use in P or PD modes.
69	PID_TYPE	Read only except in OOS or MAN; 1 to 6	5	This parameter allows you to select the PID type, which defines the controller mode of operation. 1, P: Proportional Only 2, I: Integral Only 3, PD: Proportional plus Derivative 4, PI: Proportional plus Integral 5, PID: Proportional Integral Derivative 6, NIPID: Non-integral Proportional Integral Derivative The AUTO_TUNE function is recommended for only PI (4), PID (5), and NIPID (6).

Table 52 - FOUNDATION Fieldbus Resource Block Parameters (Continued)

Index	Name	Capability	Factory Default	Comments
70	AUTO_TUNE	Read only, except in OOS or MAN and subject to sub-index restrictions:		This structure is used to configure, start, and monitor the AUTO_TUNE data collection process. This function is recommended only for PID_ TYPE 4 (PI), 5 (PID), or 6 (NIPID).
		PTNREQ bidirectional	0	PTNREQ (bidirectional)[228]: The subindex is used to start and monitor auto tune operation: 0=Off, R/W 1=Done, read only 2=Abort, read only 3=Init, R/W in MAN only 4=Search for Delay, read only 5=Search for Peak, read only 6=Search for Valley, read only
		ERROR output	0	ERROR (output): The error that caused the Auto Tune to Abort if the value is not Normal Exit: 0=Normal Exit 1=Bump Limited To Zero 2=Input Peak Too Small 3=Input Range Exceeded 4=Input Range Underrun 5=Bad PV Status
		BUMP input	0.0	BUMP (input): The amplitude of the doublet pulse imposed at the controller output that causes the measurement to respond. BUMP is expressed in percent of OUT_SCALE and should be large enough to create a maximum change in the measurement; larger than 2.5 times THRESH. Then the pulse width is automatically determined to be slightly greater than the process deadtime. If 0% is specified, it will be defaulted to 10%. Initial value is 0.0 and range is 0%-45%.
		THRESH input	1.0	THRESH (input): Input that defines an absolute error threshold as a percent of PV_SCALE used to trigger a new peak search. It is intended to discriminate a significant new disturbance response from uncontrollable electrical noise. The THRESH value should be set to 2.5 times the normal noise value in order that the first response peak be substantially larger than noise. Initial value is 1%, and the range is 0.01% - 30%.
		R_DELAY_TIME output	0.0	R_DELAY_TIME (output): Number of macrocycles from when BUMP is added to OUT until PV is greater than the initial PV plus THRESH; initial value = 0.
		R_INTERCEPT output	0.0	R_INTERCEPT (output): The actual difference between the initial value of PV and the value of PV when it is detected greater than the initial PV plus THRESH; initial value = 0.0.
		R_PEAK output	0.0	R_PEAK (output): The actual difference between the initial value PV and the value of PV when it is detected that the next value of PV is less than the previous; initial value = 0.0.
		R_PEAK_TIME output	0.0	R_PEAK_TIME (output): Number of macrocycles from when BUMP is added to OUT until it is detected that the next value of PV is less than the previous; initial value = 0.0.
		R_VALLEY output	0.0	R_VALLEY (output): The actual difference between the initial value PV and the value of PV when it is detected that the next value of PV is greater than the previous after the PEAK is detected; initial value = 0.0.
		R_SLOPEFL output	0.0	R_SLOPEFL (output): Number of macrocycles from when BUMP is added to OUT until it is detected that the next value of PV is equal to the initial value of PV after the PEAK is detected; initial value = 0.0.

228. Some values can be written to this parameter, but other values are read only.

Table 52 - FOUNDATION Fieldbus Resource Block Parameters (Continued)

Index	Name	Capability	Factory Default	Comments
71	BLOCK_ERR_ DESC_1	Read only		This parameter is used by the block to report more specific details regarding persistent errors that are reported through BLOCK_ERR: 0, BYPASS not initialized: BYPASS must be set to ON or OFF 1, SHED_OPT not initialized: SHED_OPT must be initialized for ROUT and RCAS modes 2, SP_HI_LIM less than SP_LO_LIM: SP High Limit must be greater than SP Low Limit 3, OUT_HI_LIM less than OUT_LO_LIM: OUT High Limit must be greater than OUT Low Limit. 4, OUT_SCALE•EU_0 greater than or equal to OUT_SCALE•EU_100: Low end of scale must be less than high end 5, PV_SCALE•EU_0 greater than or equal to PV_SCALE•EU_100: Low end of scale must be less than high end 6, FF_SCALE•EU_0 greater than or equal to FF_SCALE•EU_100: Low end of scale must be less than high end 7, TRK_SCALE•EU_0 greater than or equal to TRK_SCALE•EU_100: Low end of scale must be less than high end 8, PID block not scheduled; PID block must be scheduled to run by a host 9, Resource block mode Out of Service: Resource Block must be in Auto mode

Schneider Electric Systems USA, Inc.
38 Neponset Avenue
Foxboro, MA 02035
United States of America

1-866-746-6477 inside the U.S.
1-508-549-2424 outside the U.S.

pasupport.schneider-electric.com

As standards, specifications, and design change from time to time, please ask for confirmation of the information given in this publication.

© 2018 – 2019 Schneider Electric Systems USA, Inc. All rights reserved.

MI 020-612